Town of Brookhaven

Greater Bellport STP

Siting Options Feasibility Study

Prepared for:

Prepared by :

A Joint Venture

Town of Brookhaven
1 Independence Hill
Farmingville, NY 11738

Cashin Associates, PC
1200 Veterans Memorial Highway
Hauppauge, New York
and
Dvirka and Bartilucci Consulting Engineers
330 Crossways Park Drive
Woodbury, NY 11797

Greater Bellport STP Siting Options Feasibility Study

Table of Contents

EXECUTIVE SUMMARY

CHAPTER 1: INTRODUCTION

1.1 STUDY OBJECTIVE 4
1.2 NEED FOR SEWERS 4
1.3 BASIC ASSUMPTIONS/PREMISES 5

CHAPTER 2: WORK PLAN

2.1 PROJECT APPROACH 6
2.1.1 PROJECT AREA 6
2.1.2 DATA COLLECTION AND REVIEW 6
2.1.3 ESTABLISH WASTEWATER FLOW 7
2.1.4 EVALUATE SEWER SYSTEM OPTIONS 7
2.1.5 COST CONSIDERATIONS 8
2.1.6 RECOMMENDATIONS AND OVERALL SCHEDULE 9

CHAPTER 3: PROJECT DEVELOPMENT

3.1 DEMOGRAPHICS AND PHYSICAL FACTORS 10
3.1.1 CHARACTERISTICS OF STUDY AREA – SERVICE AREA DELINEATION 10
3.1.2 COMMUNITY DEMOGRAPHICS & ENVIRONMENTAL JUSTICE AREA 11

3.2 JUSTIFICATION FOR CENTRALIZED TREATMENT FACILITIES 14
3.2.1 PAST STUDIES/REPORTS SUPPORTING SEWERING FOR AREA 14
3.2.2 CONCLUSIONS OF PAST STUDIES/PLANS 15
3.2.3 HEALTH CONCERNS 16
3.2.4 ECONOMIC STAGNATION 16

3.3 WASTEWATER TREATMENT OPPORTUNITIES/ALTERNATIVES 16
3.3.1 SITES FOR FUTURE STP 16
3.3.2 PROJECTED DESIGN FLOWS – NORTH BELLPORT AND BELLPORT VILLAGE21
3.3.3 PROPOSED PLANT IMPROVEMENTS 22

3.4 SEWERING APPROACHES 27

3.4.1 PROPOSED INSTALLATION OF NEW SEWER SYSTEMS 27
3.4.2 PHASED APPROACH AND FUTURE EXPANSION 32
3.4.3 POTENTIAL ENVIRONMENTAL IMPACTS AND COMMUNITY IMPACT OF SEWERING 32
3.4.3.1 ENVIRONMENTAL ASSESSMENT 32

CHAPTER 4.0: LEGAL /ADMINISTRATIVE CONSIDERATIONS

4.1 SUFFOLK COUNTY CODES 35
4.2 SUFFOLK COUNTY SEWER DISTRICT FORMATION OR INCLUSION..... 36
4.3 PERMITTING 36

CHAPTER 5.0: SCHEDULE

5.1 IMPLEMENTATION STRATEGY 39

CHAPTER 6.0: CONSTRUCTION COST PROJECTIONS

6.1 PROPOSED PROJECT COMPONENTS 41
6.1.1 SEWER SYSTEM ASSUMPTIONS 41
6.2 CONSTRUCTION COST PROJECTIONS..... 42
6.2.1 CONSTRUCTION COST – INITIAL NORTH BELLPORT PROJECT..... 42
6.2.2 PRIVATE SEWER SERVICE CONNECTION (TYPICAL) INSTALLATION COST .. 43
6.2.3 BELLPORT VILLAGE SEWER SYSTEM INCLUSION..... 44
6.2.4 SUFFOLK COUNTY SEWER CONNECTION FEE 45
6.3 FINANCIAL CONSIDERATIONS..... 45

CHAPTER 7.0: CONCLUSIONS AND RECOMMENDATIONS

7.1. RATIONALE FOR SEWERING 47
7.2 SEWERING SCENARIOS 47
7.3 PHASED APPROACH TO SEWERING 48
7.4 INFRASTRUCTURE REQUIREMENTS 49
7.5 LEGAL REQUIREMENTS 50
7.6 SOCIAL IMPACT 50
7.7 ENVIRONMENTAL IMPACT 50
7.8 SEWERING COST 51

TABLES

Table 3-1 – Demographic Profiles: North Bellport Census Designated Place & Bellport Village (2010) 12
Table 3-2 – Woodside PS - Flow Records – 2010 – Discharge Monitoring Data 23
Table 3-3 – Woodside Ps – Effluent Discharge Limits.....23
Table 3-4 – Number of Leaching Pools Required.....26

Table 4-1 – Possible State and Federal Approvals 37
Table 5-1 – Projected Project Timeframe 40
Table 6-1 – Sewer System Options - 42
Table 6-2 – Property Owner's Costs (Typical) to Connect to Regional Sewer System 44
Table 6-3 – Future Suffolk County Sewer Connection Fee 45
Table 7-1 – Projected Project Flows 48

FIGURES

Figure 2-1 – North Bellport Project Area/Future Zoning .....
Figure 2-2 – Draft Town Land Use Plan for Bellport .....
Figure 3-2 – Public Wells and Water Mains .....
Figure 3-3 – Possible STP Sites .....
Figure 3-4 – North Bellport Environmental Justice Area .....
Figure 3-5 – Possible STP Site (Site 1) .....
Figure 3-6 – Possible STP Site (Site 2) .....
Figure 3-7 – Possible STP Site (Site 3) .....
Figure 3-8 – Possible STP Site (Site 4) .....
Figure 3-9 – Possible STP Site (Site 5) .....
Figure 3-10- Existing Woodside STP Site Plan .....
Figure 3-11- Woodside STP Expansion Parcels .....
Figure 3-12 - Proposed Leaching Pool Layout .....
Figure 3-13 - Layout of System South of Railroad .....
Figure 3-14 - Layout of System North of Railroad .....
Figure 3-15 - Pump Station and Sewer Layout – Proposed 3-inch Force Main Route .....
Figure 3-16 – Topographic Contours .....

APPENDICES

No.1: SCDHS Requirements and Standards
No. 2: Town of Brookhaven - Recharge Basin Calculations
No. 3: Proposed Force Main - Calculations
No. 4: Environmental Justice Area – Review Requirements
No. 5: Construction Cost Breakdown

EXECUTIVE SUMMARY

The sensitivity of Suffolk County's groundwater supply has had and will continue to have a direct impact on future economic development throughout the region. Recent studies have identified the potentially deleterious, long-term impacts to groundwater associated with on-site wastewater systems discharges. In an effort to preserve and safeguard the County's water resources, regulations have been promulgated by the Suffolk County Department of Health Services (SCDHS) which restrict the capacity and number of on-site sanitary systems, thus limiting economic revitalization opportunities. In response, the Town of Brookhaven has taken a pro-active stance and has aggressively pursued avenues to promote centralized wastewater treatment as an effective means for protecting the environment while stimulating development.

In 2012, the Town retained the services of the Joint-Venture **(JV)** of Dvirka and Bartilucci Engineers and Architects, P.C. (D & B) and Cashin Associates, to explore potential wastewater sewering and treatment opportunities for a select group of villages and hamlets, where such systems would be key elements in realizing planned commercial and workforce housing needs. In the draft report, Town of Brookhaven Town-Wide Sewer Study (August 2012), North Bellport was one of nine (9) ~~such~~ communities studied. As an off-shoot to this study, the Town identified the hamlet of North Bellport as a prime candidate for further study due to a need for economic stimulation and revitalization coupled with the presence of vital roadway and rail connectors. An area of North Bellport was identified as a key location, where sewering would have the most immediate economic impact. This Transit Orientated Development (TOD) and Hamlet Center located in the vicinity of North Bellport Railroad Station are the focus of this Feasibility Study.

The initial task of this Feasibility Study was to evaluate previously identified vacant parcels and existing local sewage treatment plants (STP) in the North Bellport area that were identified in the Town-wide Sewer Study that offered possibilities to support a new treatment plant or could currently and/or with expansion accept sewage from the TOD and Hamlet Center. Based upon field reconnaissance and an evaluation of available data, an assessment was performed to present the most cost-effective and feasible alternative. Once options were reviewed by and discussed with the Town and County, an alternative was selected for further assessment.

Currently there are no significant environmental health issues identified in this area that are associated with failing on-site sanitary systems. However, to stimulate economic

growth within the North Bellport TOD/Hamlet Center, the Town has determined that sewage collection facilities are necessary in the community of North Bellport. Of the five prospective sites identified for treatment facility siting and review, three sites would require the construction of a new plant and two would require future expansion of an existing facility. This assessment found that Sites, 1, 2, 3, and 4 had substantial issues that would hinder and/or discourage the construction of an STP in a timely manner. As such, these alternatives were considered not feasible in meeting the Town's intent. Criteria that were employed in the site selection process included:

- the sufficiency of lot size and/or configuration of the parcel to accommodate a facility of the size necessary to serve the TOD, Hamlet Center, and Village;
- ability to comply with the treatment facility setback requirements of the Suffolk County Sanitary Code;
- availability of the land and consideration of costs necessary to purchase needed land from one or more private property owners or obtaining consent from an existing STP operator that may not be interested in expanding their facility,
- the need to clear existing native woodlands as opposed to using an already disturbed property and consideration/utilization of existing buffers (e.g., preserved/ undevelopable open space, dedicated stormwater recharge basin, streets, highways, railroad, etc.);
- existing adjacent land uses and potential future adjacent land uses;
- potential impacts of using undeveloped land on future growth or economic development;
- topography;
- relative depth to groundwater;
- a preference for reducing the number of STPs in the area and where possible utilizing/improving an existing facility;
- the need to provide infrastructure such as a road to service the new facility;
- the anticipated complications of constructing a new plant in an Environmental Justice Area; and/or on or adjacent to environmentally sensitive areas
- the complexity and timing of permitting, environmental reviews, and approval processes; and
- overall costs and benefits of using a particular site.

A conceptual sewering strategy was developed that proposed the conveyance of TOD and Hamlet Center sewage to the existing County-owned Woodside (aka Farber) STP

(Site 5 of this Study) which had available capacity and spatial opportunities for expansion. Included in the overall plan was the installation of a gravity sewer system servicing the TOD and Hamlet Center and a required pumping station/force main system that would transport the sewage through local streets to the Woodside STP. The system would have the potential to handle a projected 75,000 gallons per day of wastewater from North Bellport as well as the eventual inclusion of 60,000 gallons per day from Bellport Village, as required by SCDPW. In addition, future opportunities will exist for expanding the sewer system in conformance with the Community's vision. Two potential sites were identified to house the needed pumping station. A strip of land abutting Montauk Highway immediately west of Station Road was selected as the most cost beneficial and accessible location. In summary, the existing SCDPW Woodside STP, with a pumping station located south of Montauk Highway and west of the LIRR station with the available capacity to allow the Village to connect is the preferred design.

CHAPTER 1: INTRODUCTION

1.1 STUDY OBJECTIVE

Access to major highways and the presence of a centrally located LIRR station makes the North Bellport TOD and Hamlet Center a promising location for redevelopment, economic vitalization, affordable multi-generational housing, and environmental protection. To provide a stimulus to achieve the goals identified in the community's vision, the Town of Brookhaven has spearheaded efforts to promote the construction of sanitary sewers as a means of accelerating and encouraging economic recovery within its downtown business districts while insuring future preservation of groundwater quality.

This study is in response to that directive, and focuses upon enhancing economic opportunities and reducing public health risks by exploring available and feasible wastewater treatment and sewering scenarios for North Bellport. As a succeeding step to the Draft Town-wide Sewer Study prepared for the Town by the Joint Venture, various wastewater treatment scenarios were analyzed, with the intention of:

- Providing a cost-effective sewer collection system and treatment strategy that could support future development of the TOD and Hamlet Center that stimulates economic growth and supports the development of sustainable, mixed-use development and mixed-market rate housing opportunities.
- Evaluating three vacant parcels as potential candidates for housing an STP as well as two existing STP sites where the facility may have available capacity and/or can be expanded to accommodate projected sewage flows from the TOD and Hamlet Center and other developable areas within the Greater Bellport area.
- Preserving and improving the County's surface and groundwater resources and protecting public health by controlling wastewater discharges.
- Educating the community of potential siting options, the benefits of the sewering, and allaying fears of further blight in the community.
- Setting the foundation for the formation of a feasible sewering and wastewater treatment concept for the North Bellport area that will facilitate the future efforts of the Town in pursuing funding and ultimate project implementation.

1.2 NEED FOR SEWERS

Community visioning for the North Bellport community indicated a desire for community redevelopment, revitalization, affordable multi-generational housing, transportation enhancements and environmental protection. A substantial portion of the Town of Brookhaven, including the North Bellport study area, is situated within groundwater recharge protection areas defined by the Suffolk County Department of Health Services (SCDHS) Hydro-geologic Groundwater Management Zone map. Depending upon zone designation, minimum

lot sizes have been established for new development assuming that traditional on-site wastewater treatment systems (cesspools and septic tanks) will be utilized. Such provisions constrain the creation of more densely developed downtown business districts, discourage commercial investment and impede the construction of affordable mixed-generational housing, unless alternative (innovative) on-site wastewater disposal technologies are utilized or community or regional sewage treatment plants (STPS) are pursued. The Town has identified that sewering and the utilization of STPs are the most cost-effective means of providing economic stimulus while preserving groundwater quality.

In the North Bellport area, the installation of sewers will facilitate commercial and residential development within the TOD and Hamlet Center. In addition, the eventual inclusion of Bellport Village in the overall sewering strategy will extend economic opportunities throughout the entire Greater Bellport area. The Suffolk County Department of Public Works (DPW) has targeted the Village of Bellport for future STP investments that will foster Village enhancement and redevelopment.

1.3 BASIC ASSUMPTIONS/PREMISES

In the development of this study various assumptions formed the basis of the sewering and wastewater treatment concepts developed. These include:

- Wastewater flow projections for North Bellport and Bellport Village were developed and provided by the Town and the Suffolk County Department of Public Works (SCDPW) for this study. A daily design flow of 135,000 gallons per day was established and was the basis for evaluating spatial adequacy of the vacant sites to house a necessary STP. It was also utilized in determining the potential expansion needs at the Woodside STP and Bellhaven STP to accommodate such flow. This figure was also important in establishing pumping station capacity and force main sizing.

- The proposed expansion of the Woodside STP would be contingent upon the availability of adjoining Town lands for locating effluent leaching pools as well as provide adequate buffers between plant facilities and adjoining residential parcels. It is envisioned that a portion of the existing underutilized Town owned storm-water recharge basin to the north of the Woodside STP would be available for such use.

- The land identified for the construction of the proposed pumping station could be either purchased by the Town or secured through an easement process.

CHAPTER 2.0 WORK PLAN

2.1 PROJECT APPROACH

2.1.1 SEWER SERVICE AREA

The 2009 Greater Bellport Sustainable Community Plan documented the community's desire for mixed use development around the Bellport LIRR station and along Montauk Highway to create a hamlet center and give the Greater Bellport community its own unique sense of place. This area identified in the 2009 Vision was analyzed in the Brookhaven Town-wide Sewer Study - N. Bellport Study Area for analysis (**Figure 2-1**). For this study, the proposed sewering area consists of the portion identified as the TOD and Hamlet Center. This area is shown in the Town's earlier Draft Land Use Plan for Bellport as "TOD" and "Main Street" (**Figure 2-2).**

The original concept was to develop a sewer system for this area and identify either a local parcel that could either support an STP or locate an existing nearby plant with available or potential treatment capacity. Upon discussions with the SCDPW, the utilization of their nearby Woodside STP became a viable cost effective option, however to utilize this facility it would be necessary for the Town to:

- Include within the proposed sewer service area flow generated from Bellport Village.
- Provide the use of land adjacent to the Woodside STP for future leaching pools

2.1.2 DATA COLLECTION AND REVIEW

An evaluation of the study area was accomplished through a variety of data collection methods and analysis, including:

- A review of aerial images downloaded from the Internet
- A confirmatory field reconnaissance trip of potential STP sites (vacant parcels) as well as the Bellhaven Nursing Home and Woodside STPs.
- A street assessment performed on the computer and in the field to identify potential force main routes as well as highway crossings.
- A coordination meeting with the Town, SCDPW and their consultant, SCDHS, as well as the Joint Venture to discuss the inclusion of Bellport Village and the potential utilization of the Woodside STP.

An array of technical documents including reports and plans were provided by the Town and the SCDPW. Local environmental data were obtained from various internet sources as well as area specific planning documents and studies.

2.1.3 ESTABLISH WASTEWATER FLOW

The SCDHS in their publication *Standards for Approval of Plans and Construction for Sewage Disposal Systems for Other Than Single-Family Residences* (pertinent excerpts in **Appendix No.1**) provide specific guidance related to calculating typical wastewater generation rates that would be expected from residential parcels as well as commercial, industrial, institutional and public usages. A gravity type sewer system is typical and the preferred collection system proposed for this project due to the minimal long term maintenance requirements. The system would consist of a minimum pipe size of 8 inch diameter, installed at a minimum slope of 0.4 % required to maintain a mean velocity of 2 feet per second. The capacity of this piping system should be more than adequate to accommodate the projected average daily sewage flows of 135,000 gpd generated from projected commercial, light industrial, and multi-family residential developments. This sewage flow represents a contribution of 75,000 gpd from the TOD and Hamlet Center and 60,000 from Bellport Village, which was provided by the Town of Brookhaven and the SCDPW respectively. This design flow was utilized when sizing the pumping station and force main system as well as the expansion requirements at the Woodside STP.

2.1.4 EVALUATE SEWER SYSTEM OPTIONS

The following bullets summarize the alternative assessment performed for this study:

- Three vacant parcels within the vicinity of the TOD and Hamlet Center were evaluated to determine if adequate space was available to house an STP sized to handle projected flows as well as future expansion. In addition, the location of each was reviewed to determine if adjoining property uses would preclude the installation of such a facility. To assess land availability, a projected area coverage was estimated to house a 135,000 gpd treatment plant with ground recharge facilities and required redundancy. A template was created that was used to superimpose on each parcel (Figure 2-3). In addition, setback and buffer zones would be required separating plant process units from adjoining properties and structures, per SCHDS guidelines (see Appendix 1). The estimated costs, land acquisition and assembly requirements, potential impacts to surrounding land uses, depth to groundwater, the need for clearing existing woodlands, potential for future expansion, and other essential factors were considered.

- Only two local STPs were identified. One being the Bellhaven STP on Beaver Dam Road and the other the County-owned Woodside STP off of Harrison Avenue. The Bellhaven facility lacked existing available capacity and future plant expansion was not feasible. Considerations included but were not limited to determining existing capacity, expansion potential, the need for upgrades, cost considerations, potential sewer access routes, willingness of the owners and operators to accept additional wastewater, special

considerations for handling wastes (e.g., pharmaceuticals at Bellhaven), setbacks and buffers, potential impacts to adjoining land uses, and other factors.

A gravity collection system proposed for the TOD and Hamlet Center would include sewers running down each roadway. Due to low maintenance requirements a gravity system, where feasible, is the preferred sewage conveyance option. A centrally located site for the proposed pumping station would be required to accommodate a shallow (above ground water) installation of the gravity sewer collection systems situated on both the north and south sides of the LIRR tracks. Two potential locations for the proposed pumping station were studied.

- The two pumping station sites evaluated were situated immediately west of Station Road, one being north and the other south of the LIRR tracks in North Bellport. A future sewer connection from the Bellport Village area could be accommodated in either scenario. Visually, both sites appear to be feasible options to locate a pumping station, assuming that the land can be procured. The benefits of each are presented as well as cost implications.

- An array of force main alignments are possible, all extending through local neighborhood streets. The exact selection will depend upon numerous factors, including topographical considerations, the location of planned development existing roadway conditions and the impacts to existing subsurface utilities. It may be prudent to place the force main on a street being proposed for roadway reconstruction. *Note: opportunities may exist to utilize directional drilling techniques for installing portions of the force main. Such methods can accelerate the project schedule and greatly reduce roadway disruption. As part of the sewer installation, the pipe will be tunneled below Sunrise Highway. The point of crossing (tunneling) of the Sunrise Highway will be paramount in the selection of the northern portion of the route.*

2.1.5 COST CONSIDERATIONS

An assessment of each site proposed as a possible location for an STP to service North Bellport was performed. The vacant parcels were ruled out due to benefits of using a nearby existing and currently operating treatment facility with sufficient land area. Besides spatial concerns on the Bellhaven property, it was concluded after initial discussions between the Town and the owners that the expansion of the plant would not be a realistic option. The expansion of the Woodside/Farber STP option appears feasible and has been recommended as the preferred approach. Subsequent efforts were undertaken to layout local collection systems that would service the TOD and Hamlet Center as well as pumping station/force main options that would convey the sewage to the Woodside STP facility. Overall projected costs were developed for these components, with consideration being given to two potential locations for the pumping station. One was to the south and the other to the north of the LIRR tracks. The former site had

been previously identified in a feasibility report prepared for the SCDPW. An array of other costs however must be considered when considering a system of this nature. These include but are not limited to:

- Suffolk County hookup fees
- Cost associated with forming or joining a Sewer District.
- Improvements required at the plant
- Cost for property purchase (pumping station site)
- Property hookup cost (building to sewer service line connection at curbline).
- Annual operation and maintenance fees.

2.1.6 RECOMMENDATIONS AND OVERALL SCHEDULE

The proposed conceptual plan of collecting sewage from the TOD and Hamlet Center and pumping it to the Woodside STP is both viable and practical. While an aggressive schedule is proposed, the recent efforts of the Town to secure funding will greatly help in achieving this goal. Since there is a reasonable expectation that financing can be secured, it would be prudent to begin the detailed engineering and environmental assessment processes.

Before construction can begin, an array of regulatory reviews and approvals/permits must be secured, as well as a parallel public information program established. Obtaining permission to tunnel below a State highway and the LIRR tracks could be a major cause of delay.

CHAPTER 3: PROJECT DEVELOPMENT

3.1 STUDY AREA CHARACTERISTICS AND DEMOGRAPHICS

3.1.1 CHARACTERISTICS OF STUDY AREA – SERVICE AREA DELINEATION

The Study Area consists of the Hamlet of North Bellport with focus on the Transit Oriented Development (TOD and Hamlet Center) area located around the Bellport train station and the intersection of Montauk Highway and Station Road as delineated in the Town's Greater Bellport Community Plan, with the possibility for the Incorporated Village of Bellport to connect at some point in the future (**Figure 3-1**).

Existing land use in North Bellport consists of limited commercial development along Montauk Highway, Atlantic Avenue, and Station Road, vacant land, and single-family development in the outer reaches of the community. Land use in the Village of Bellport consists primarily of a typical Suffolk County "Main Street" business district along South Country Road, a golf course, and residential development.
There are two existing Sewage Treatment Plants in the area:

- the Woodside/Farber STP located approximately one-and-a-half miles to the north of the train station at the northeast corner of Harrison Avenue and Patchogue-Yaphank Road (CR101); and
- Bellhaven Nursing Home located to the east, along Beaver Dam Road, roughly three-quarters of a mile to the east of Station Road.

The study area is located within Suffolk County Department of Health Services' Groundwater Management Zone VI which requires at least 40,000 square feet per house lot unless the development is served by a community sewage treatment plant. Public water mains are installed in the rights-of-way of nearly all improved streets in the area. A Suffolk County Water Authority wellfield is located southeast of the study area near the intersection of Willow Avenue and Association Road (**Figure 3-2**). Protecting this public water supply is of critical importance. Topography in the area is generally flat to gently-sloping with the exception of a few isolated moderately-steep slopes to the east near Bellhaven Nursing Home. No water bodies or NYSDEC wetlands were identified in the study area. Waterbodies and wetlands outside the study area but in general proximity include Motts Brook to the southeast, which forms the Village of Bellport's eastern boundary, Hedges Creek to the southwest, upper Mud Creek to the northwest, and Bellport Bay to the south.

The Town identified five possible locations for new or expanded STPs, including:

- Site 1: Property located along the south side of Beaver Dam Road, north of the terminus of Arthur Road, east of Carver Boulevard, and west of Lexington Avenue in North Bellport. The property is the site of the Bellhaven Nursing Home.
- Site 2: Property located north of Atlantic Avenue, south of Patchogue Avenue, east of the newly constructed Boys and Girls Club of Bellport, and west of Post Avenue in North Bellport.
- Site 3: Property located north of Hollywood Avenue and south of Willow Avenue on both sides of an undedicated, open but unpaved section of Clinton Avenue.
- Site 4: Property located north of Maple Avenue/Association Road, south of the Long Island Railroad, east of Susan Drive, and west of Doane Avenue.
- Site 5: Property located on the northeast corner of the intersection of Harrison Avenue and Patchogue-Yaphank Road (CR101) on the existing Woodside/Farber Sewage Treatment Plant site.

A map of the envisioned greater Bellport community service area and the five potential STP sites reviewed for this study is provided in the **Figure 3-3**. The specific characteristics of the five sites are discussed in greater detail in Section 3.3.

3.1.2 COMMUNITY DEMOGRAPHICS AND ENVIRONMENTAL JUSTICE AREA

Community Demographics

According to the 2010 US Census, the North Bellport Census Designated Place (CDP) had a population of 11,545 and the Incorporated Village of Bellport had a population of 2,084 for a combined total of 13,629. During the time period 2000-2010, the North Bellport CDP grew by 28 percent, while Bellport Village's population declined by 12 percent. The reason for the decline in the Village's population is unclear but since the number of housing units remained essentially the same and the median age is relatively high (51 as compared to North Bellport's 32) and the number of persons per household is relatively low, the decrease may be due in part to a greater number of "empty nesters" living in that community, as well as possible seasonal residents who claim another location as their primary residence.

In regard to housing units, the North Bellport CDP had a total of 3,652 units in 2010 and Bellport Village had a total of 1,170 for a total of 4,822. The number of dwelling units reflects an increase of 43 percent in the North Bellport CDP and 0.3 percent in the Village. Just 60 percent of North Bellport's dwelling units were classified as owner-occupied in 2010 as compared to 84 percent of Bellport Village's dwelling units. The average household size was 3.4 in North Bellport and just 2.3 in the Village.

North Bellport has a large minority community. A total of 46.2 percent of North Bellport's population is classified as either non-white or of two races and the proportion that is Latino or Hispanic of any race, is 29.3 percent. This compares to the Village's 5.8 percent non-white or of

two races categories and 4.2 percent Latino or Hispanic. Educational attainment figures indicate that 85 percent of North Bellport residents had a high school diploma or higher level of education, while 97 percent of Village residents met this criterion. Poverty is also an issue in North Bellport. A total of 14.1 percent of North Bellport residents were living below the poverty line with a median annual household income of $74,641. This compares to the Village's 3.2 percent poverty rate and $83,664 annual household income.

The high proportion of minorities, the economically depressed nature of the community and considerable vacant developable land in the area has led to the delineation and designation of an "Environmental Justice Area" in the North Bellport community by the New York State Department of Environmental Conservation (NYSDEC). The Town and local groups have made considerable effort to promote planned growth and revitalization in the area through the community land use plan and other studies and planning efforts.

A summary of area demographic statistics is provided below.

Table 3-1 - Demographic Profiles
North Bellport Census Designated Place and Bellport Village (2010)

Statistic	North Bellport CDP	Bellport Village
Total Population	**11,545**	**2,084**
Change in Population 2000-2010 (%)	+28.2	-11.8
Median Age (years)	31.6	51.3
Education (%) high school graduate or higher)	85.3	96.9
Total Housing Units	**3,652**	**1,170**
Change in Total Housing Units 2000-2010 (%)	+43.4	+0.3
Vacant Housing Units (%)	7.9	21.3
Owner Occupied Units (%)	59.7	84.1
Renter Occupied Units (%)	40.3	15.9
Average Household Size –inhabitants	3.42	2.26
Median Annual Household Income ($)	**74,641**	**83,664**

Statistic	North Bellport CDP	Bellport Village
Individuals Below Poverty Level (%)	14.1	3.2
Race (%)	**100**	**100**
White (%)	53.9	94.2
Black or African American (%)	26.5	1.7
American Indian or Native Alaskan (%)	1.4	0.4
Asian (%)	2.6	1.3
Native Hawaiian or other Pacific Islander (%)	0.1	0.0
Some other Race (%)	9.6	0.6
Two or More Races (%)	6.0	1.8
Latino or Hispanic (any race) (%)	29.3	4.2

North Bellport Environmental Justice Area

The section of the North Bellport community located in the NYSDEC-designated Environmental Justice Area (EJA) is located north of Montauk Highway and Railroad Avenue, south of Sunrise Highway, east of North Dunton Avenue, and west of the Carmans River as shown in **Figure 3-4.**

EJAs are locations where special efforts are made to ensure the fair treatment and meaningful involvement of all people regardless of their race, color, national origin, or income as it relates to land use and development activities. It is the goal of the State's EJ policies to improve these areas while addressing disproportionate adverse environmental impacts associated with development and implementation and enforcement of environmental laws.

A request for a permit from the NYSDEC for a project affecting an EJA triggers requirements for conformance with NYSDEC Environmental Justice Policy 29 permit regulations. These regulations govern activities within EJAs and provide a framework for undertaking an analysis of EJ issues. They are intended to enhance public participation, address any language barriers that may exist, provide alternative dispute resolution opportunities, and require the consideration of environmental impacts of proposed projects having more than one significant impact in an EJ area. NYSDEC's regulations establish how permit applicants must undertake an EJ analysis, including requirements for an evaluation of significant and adverse disproportionate environmental impacts.

3.2 JUSTIFICATION FOR CENTRALIZED TREATMENT FACILITIES

3.2.1 PAST STUDIES/REPORTS SUPPORTING SEWERING IN AREA

Bellport Station First Phase of "Learn by Doing": A Grassroots Community-Building Initiative

The Bellport Station "Learn by Doing" Initiative report was prepared in 2002 by New Directions Community-Based Research Institute. The goals of the Initiative were essentially to:

- Develop a database that would be helpful when considering community development;
- Educate area residents and business owners about the community's history, resources, capabilities, accomplishments, and challenges and identify future community leaders;
- Develop plans to achieve the community's vision for the area; and
- Create organizational partnerships.

The report discusses the trials, tribulations, and successes of past plans for economic growth, affordable housing, and community development and enhancement, provides a comparison of demographic statistics between 1990-2000 in order to assess socioeconomic conditions and trends, outlines public outreach efforts using focus groups and personal interviews, discusses what was learned by the process, identifies planning subareas, and includes envisioned development plans. The plans focuses on the area near the train station, identifies desirable land uses, including needed affordable housing, mixed-use buildings, offices, new bus stops, a new train station, a day care center, a library and cultural center, public spaces, retail businesses and restaurants. The report promotes economic growth, development of alternative transportation opportunities, increased availability of affordable units, energy efficient and sustainable development, and a safe and environmentally healthy community.

South County School District Hamlet Study

The South County School District Hamlet Study is a study that was prepared by the Town (no date indicated). It addresses neighborhoods in the South County School District including the Village of Bellport, North Bellport, Brookhaven hamlet, and Yaphank. It analyzes and addresses issues relating to demographics, land use and zoning, housing, and provides special focus on transportation issues including emphasis on developing multi-modal transportation opportunities at the Bellport train station. Recommendations from the study include creation of new bus stops and construction of bus shelters, removal of some stop signs, construction or delineation of new pedestrian crosswalks, creation of bikeways, construction of turning lanes and turning lane improvements, upgrades to the traffic signal at Montauk Highway and Station Road, and a new traffic signal at Hampton Avenue and Station Road.

Community Survey: North Bellport and East Patchogue

The Community Survey includes the collection of US Census Bureau demographic data for 2000, including general demographic data, social, economic, and housing characteristics, and a questionnaire which posed questions relating to demographics, area services, and identification of the positive and negative aspects of the community. The survey process also included a summary of general observations and comments from the public that outline issues and concerns and recommendations for improvement. A total of 95 questionnaires were returned as part of the process.

Greater Bellport-South Country Communities Sustainable Community Plan

In 2009, the Town of Brookhaven completed its "Greater Bellport South Country Communities Sustainable Community Plan." The Plan provides the vision for the Hamlets of Bellport, North Bellport, Hagerman, East Patchogue, and Brookhaven with a focus on land use, zoning, housing, infrastructure, neighborhood walk-ability, area beautification, and commercial center enhancement. The Plan specifically calls for the creation of a mixed use hamlet center and TOD and Hamlet Center around Bellport Station which would include:

- a Main Street mixed commercial development along Montauk Highway;
- TOD and Hamlet Center located around the train station;
- retail and offices with shared parking near the train station;
- housing north and south of the commercial areas, including multifamily development, live/work units, with hopes of attracting working artists to the area, and two and three family residences;
- a large park and open space to the north of the commercial district between multifamily residential developments; and
- a transfer of development rights program to protect key environmental resources in sensitive hinterland areas while allowing for a more concentrated planned TOD and Hamlet Center in the North Bellport study area.

The recommendations of this study echo many of the recommendations of the 2002 The Bellport Station "Learn by Doing" Initiative.

3.2.2 CONCLUSIONS OF PAST STUDIES/PLANS

The studies and plans that have been prepared for North Bellport and nearby areas in recent years have focused on social and economic issues, business development, community revitalization, increased availability of affordable housing, enhanced multi-modal transportation opportunities, and smart and sustainable growth fashioned to Main Street-style development. In order to achieve these goals, suitable infrastructure needs to be in place to support much needed growth and vitalization, while preserving environmental quality and the public's health, safety and general welfare. Providing sewers is one of the first and most

critically important steps to providing the infrastructure necessary to achieving the socioeconomic goals of promoting affordable housing and economic investment and opportunity, and preserving environmental quality in the North Bellport community.

3.2.3 HEALTH CONCERNS

Increased development including affordable housing, business and employment opportunities, and enhanced transportation systems will result in increased density, and greater community vitality, but will also generate greater volumes of sanitary waste that must be collected, treated, and released to the environment. A relatively shallow depth to groundwater and general proximity to the south shore, and increased sewer and stormwater generation in the area necessitates the establishment of new and enhanced infrastructure and utilities. Providing sewers in the area can help the community to achieve its vision of increased housing and economic opportunities without significantly jeopardizing environmental quality or affecting public health from increased wastewater generation and disposal.

3.2.4 ECONOMIC STAGNATION

The review of previously developed community plans, a general lack of business activity, and US Census data indicate the presence of a largely minority community that is struggling economically. Education levels, median household incomes, and the percent of households that are owner-occupied are relatively low; while the number of individuals below the poverty line, the percentage of households that are renter-occupied, and the average household size are relatively high, indicating a community that is having economic challenges. A lack of recent growth, business development, and adequate sewer infrastructure in the area has contributed to this economic stagnation. The Town and local organizations have been working to turn this trend around but additional investment in the community is needed.

3.3 WASTEWATER TREATMENT OPPORTUNITIES/ALTERNATIVES

3.3.1 Sites for a Future STP

Five possible locations for an STP were considered including two sites that currently have an operating facility (refer to **Figure 3-3**. Summary descriptions of the five candidate STP sites are provided below.

<u>Site 1</u>

- The subject site is located along the south side of Beaver Dam Road, north of the terminus of Arthur Road, east of Carver Boulevard, and west of Lexington Avenue in North Bellport.

- The property consists of five privately owned contiguous tax parcels totaling 10.5 acres including an abandoned "paper street" that runs through the site.
- The property is currently developed with the 240-bed Bellhaven Center for Rehabilitation and Nursing Care and is zoned NHH (Health Facility). The facility is currently served by its own STP
- The facility's STP has a capacity of 40,000 gpd and an average flow of 23,000 gpd. The plant design includes an equalization tank, three dual train SBR units, and sand filters. The effluent is discharged to leaching pools. The STP is currently operating at marginal condition.
- The nursing and rehabilitation facility covers roughly 65 to 70 percent of the site.
- Adjacent land uses include Beaver Dam Road, commercial/industrial and a multifamily residential development to the north. Vacant wooded land currently exists adjacent to the south, east and west of the subject site but this land is privately owned and could be developed for residential purposes in the future.
- Access to the site would be obtained from Beaver Dam Road.
- There are no NYSDEC mapped wetlands on or immediately adjacent to the property. The headwaters of Mott's Brook are located approximately 1,000 feet south of the STP but no other water features were identified nearby.
- The site's topography is generally flat on the developed portion of the site; however, steeper slopes exist at the south end in the undeveloped portion of the site, adjacent to the facility's STP. Topography along Beaver Dam Road is undulating near the site.
- The property is located in Suffolk County Groundwater Management Zone VI.
- Based on Suffolk County Department of Health Services' 2002 water contour map and the USGS's Bellport Quadrangle topographic map, the depth to groundwater is estimated to be roughly 18-28 feet. Additional investigation is needed to confirm/determine actual depth to groundwater, distance to wetlands and surface waters special districts, etc.
- The nursing home effluent likely contains trace amounts of pharmaceuticals which may require additional advanced treatment or pretreatment in the future and could complicate future connection to another treatment facility.
- The STP is a privately owned facility and its owners have indicated to the Town that they are not amenable to expansion.
- **Figure 3-5** shows Site 1.

Conclusion: The use of the Bellhaven STP is not feasible primarily due to property limitations in terms of plant setbacks and topography and negative interests expressed by the owners.

Site 2

- The subject site is located north of Atlantic Avenue, south of Patchogue Avenue, east of the newly constructed Boys and Girls Club of Bellport, and west of Post Avenue.
- The property consists of 22 contiguous privately owned tax parcels and a "paper street" (Michigan Avenue) that runs through the site. Eighteen of the parcels are on the west side of the paper street and 4 are on the east side. The total site area, including a section of a "paper street" that runs through the site, is 5.5 acres.
- The property is currently undeveloped woodland and is zoned A1 Residence.
- Adjacent land uses include single-family residences, Atlantic Avenue, and the Boys and Girls Club of Bellport to the west.
- Access to this site could be obtained from Atlantic Avenue and/or Patchogue Avenue.
- There are no NYSDEC mapped wetlands on or adjacent to the property.
- USGS topographic data indicate that the site's topography is generally flat.
- The property is located in Suffolk County Groundwater Management Zone VI.
- Based on the Suffolk County Department of Health Services' 2002 water contour map and the USGS's Bellport Quadrangle topographic map, the depth to groundwater is estimated to be roughly 25-30 feet. If this site is selected, additional investigation would be needed, including a determination of actual depth to groundwater.
- The subject property is located in a NYSDEC Environmental Justice zone and would require an Environmental Justice analysis including a review of significant and disproportional environmental impacts and comprehensive public outreach.
- Use of this property would require the assembly of numerous privately owned single and separate parcels which will add to the cost of using this site. Acquisition of the lots could be difficult and time consuming, thereby restricting or prohibiting assembly.
- **Figure 3-6** shows Site 2.

Conclusion: The use of this 5.5 acre vacant site for the proposed STP is not feasible primarily due the uncertainty and costs of acquiring multiple privately owned properties, the cost of constructing a brand new STP rather than using an already established facility, a potentially lengthy and costly approval process, and locating a facility on this site would contribute to the proliferation of STPs in the area rather than consolidation of services.

Site 3

- The subject site is located north of Hollywood Avenue and south of Willow Avenue on both sides of an undedicated, open but unpaved section of Clinton Avenue.
- The property consists of five privately owned tax lots totaling 5.6 acres. Three of the lots are on the west side of the right-of-way and two lots are on the east side of the right-of-way.
- The property is currently undeveloped woodland and is zoned A1 Residence.

- Adjacent land uses include some single-family residences, a 1.1-acre stormwater recharge basin, and land that is currently vacant but available for medium density residential development.
- Access to this site could be obtained from Clinton Avenue from Head of the Neck Road and/or Maple Avenue.
- There are no NYSDEC mapped wetlands on or adjacent to the property.
- USGS topographic data indicate that the site's topography is generally flat.
- The property is located in Suffolk County Groundwater Management Zone VI.
- Based on the Suffolk County Department of Health Services' 2002 water contour map and USGS's Bellport Quadrangle topographic map, the depth to groundwater is estimated to be roughly 30 feet. If this site is selected, additional investigation would be needed, including a determination of actual depth to groundwater.
- **Figure 3-7** shows Site 3.

Conclusion: The use of this 5.6 acre vacant site for the proposed STP is not feasible primarily due to the uncertainty and costs of acquiring multiple privately owned properties, the cost of constructing a brand new STP rather than using an already established facility, a potentially lengthy and costly approval process, and locating a facility on this site would contribute to the proliferation of STPs in the area rather than consolidation of services.

Site 4

- Site 4 is located north of Maple Avenue/Association Road, south of the Long Island Railroad, east of Susan Drive, and west of Doane Avenue.
- The site consists of two privately owned adjacent lots totaling 5.9 acres.
- The property is currently undeveloped woodland and is zoned A1 Residence.
- Adjacent land uses include single-family residences, Doane Avenue, vacant privately-owned land that can be developed as medium density residential development in the future and the Long Island Railroad.
- Access to this site could be obtained from Doane Avenue.
- There are no NYSDEC mapped wetlands on or adjacent to the property.
- USGS topographic data indicate that the site's topography is flat to gently sloping.
- The property is located in Suffolk County Groundwater Management Zone VI.
- Based on Suffolk County Department of Health Services' 2002 water contour map and USGS's Bellport Quadrangle topographic map, the depth to groundwater is estimated to be roughly 23-28 feet. If this site is selected, additional investigation would be needed including a determination of actual depth to groundwater.
- **Figure 3-8** shows Site 4.

Conclusion: The use of this vacant site for the proposed STP is not feasible primarily due to the uncertainty and costs of acquiring multiple privately owned properties, the cost of constructing

a brand new STP rather than using an already established facility, a potentially lengthy and costly approval process, and a facility on this currently vacant site would contribute to the proliferation of STPs in the area rather than consolidation of services.

Site 5

- Site 5 is the location of the existing Woodside/Farber Sewage Treatment Plant which is owned and operated by Suffolk County. The property is located north of Harrison Avenue, south of a Town-owned stormwater recharge basin, east of Patchogue-Yaphank Road (CR101), and west of undeveloped Town-owned land.
- Site 5 consists of one publically owned lot totaling 5.2 acres. A 2.7 acre stormwater recharge basin that collects runoff from an adjoining residential community is located to the north of this site. The Town has indicated that a portion of this under-utilized parcel would be available for the installation of leaching pools. Based on discussions with the County, expansion of the plant is feasible.
- The property is developed with a sewage treatment plant. The plant design includes an equalization tank, dual aeration tanks/clarifiers prior to de-nitrification filters, and discharges its effluent via recharge basins. The system has a capacity of 400,000 gpd and currently receives approximately 250,000 gpd. The site is zoned B Residence.
- Adjacent land uses include a highway with an approximate 150-foot wide right-of-way, a three-acre Town-owned recharge basin, five-acre wooded Town-owned parkland, and some single-family residences.
- Access to this site is obtained from Harrison Avenue.
- There are no NYSDEC mapped wetlands on or adjacent to the property.
- The site's topography is generally flat with the exception of the sidewalls of four existing leaching fields (two on the north side and two on the south side) and a sand berm/sand storage area located along the east side of the property.
- The property is located in Suffolk County Groundwater Management Zone VI.
- Based on the Suffolk County Department of Health Services' 2002 water contour map and USGS's Bellport Quadrangle topographic map, the depth to groundwater is estimated to be roughly 25-45 feet, which would be adequate for the on-site discharge of treated treatment plant effluent
- A potential exists to expand and upgrade this existing facility
- Future cost savings related to operational and maintenance costs will be realized by an expansion of an existing STP.
- The SCDPW has indicated that 20,000 gallons of unallocated flow exists at the Woodside Plant that is available for use by the TOD and Hamlet Center. If the future use of currently allocated flows does not materialize, opportunities may exist to re-allocate such flows to the North Bellport system.
- **Figure 3-9** shows Site 5.

Conclusion: With the availability of a portion of the adjoining stormwater recharge basin, the total land required to expand the Woodside/Farber STP to meet the projected demands of North Bellport makes this a feasible option. The Woodside STP, with the currently available capacity of 20,000 gpd and the possibility for additional flow will provide an interim solution to the sewage treatment needs of North Bellport. The entire facility property is currently owned and operated by the County, was recently upgraded, and has the necessary baseline permits and infrastructure.

Based upon an evaluation of an array of factors including: the availability of sites of sufficient acreage, cost considerations, environmental justice considerations, compliance with regulatory setbacks and buffers, topography, site access, site ownership, and land acquisition requirements, level of existing site disturbance, availability of existing flow capacity, and timing considerations relating to phasing, permitting, environmental analyses, and approvals, Site 5, Woodside/Farber Sewage Treatment Plant, appears to be the most feasible and therefore preferred alternative for accepting the area's projected sewer flow.

3.3.2 PROJECTED DESIGN FLOWS – NORTH BELLPORT AND BELLPORT VILLAGE

The Suffolk County Department of Public Works (SCDPW) is currently performing a study entitled the *Suffolk County Sewer Capacity Study for Bellport, Sayville, Ronkonkoma-Hub, Middle Island Corridor, Mastic/Shirley, Yaphank and Southampton*. The goal of this study is to evaluate the feasibility of providing sewage collection and treatment facilities to the Bellport Village and other communities. As part of this exercise, projected wastewater flows were calculated for each Village area including portions of the Village of Bellport and North Bellport.

The SCDPW's consultants' draft analysis identifies the portions of Bellport Village that are proposed for sewers. They include:

- The areas zoned as Business E and professional Business in the vicinity of South Country Road and Station Road
- Bellport Village Golf Course
- Certain parcels north on Station Road to Kreamer Street and east and west of South Country Road (between New Jersey Avenue and Academy Lane)

Bellport Village is proposed to be serviced by low pressure sewers (LPS). Due to the high groundwater table in the area, such systems would be appropriate in order to minimize excavation depths and avoid dewatering. The proposed low pressure sewers that will service properties located in Bellport Village consist of 2-inch diameter and 3-inch diameter piping. In this study, the low pressure sewers would convey flow north along Station Road towards the

proposed pump station located south of the LIRR tracks at the Bellport station.[1] Based upon this report, the SCDPW has indicated that the LPS system will be able to convey the average daily design flow of 60,000 gallons per day from Bellport Village.

In 2009, the Greater Bellport Coalition and the Town of Brookhaven completed its Greater Bellport Sustainable Community Plan. The Plan provides the vision for the Hamlets of Bellport, North Bellport, Hagerman, and East Patchogue with a focus on land use, zoning, housing, infrastructure, walk-ability, area beautification, and commercial center enhancement. The Plan specifically calls for the creation of a mixed use hamlet center and transit oriented development around Bellport Station.

The Town of Brookhaven has estimated that 75,000 gallons/day of wastewater will be generated from the downtown North Bellport TOD and Hamlet Center which is shown in **Figure 2-2** as "TOD" and "Main Street". The TOD and Hamlet Center represent a segment of a larger development strategy for the greater Bellport Area, and has been identified as the area that would receive the immediate economic benefit from the installation of a regional sewer system.

When fully developed the average daily flow generated from the North Bellport and adjoining Bellport Village area has been projected to be 135,000 gpd. Though only 20,000 gallons of the existing 400,000 gallon treatment capacity at the Woodside STP is currently available for Bellport sewage, it is anticipated that as demands materializes, the facility will be expanded to accommodate the total project flow. If a sewer project is approved for North Bellport, it is projected that initial wastewater flows to SCDPW's Woodside Sewage Treatment Plant (STP) from the downtown TOD and Hamlet Center could commence as early as 2016. While still in the conceptual stage, the construction of a sewer system within Bellport Village and the conveyance of the wastewater to the proposed North Bellport Pumping Station are anticipated to occur within the next decade.

3.3.3 PROPOSED PLANT IMPROVEMENTS

The SCDPW owns and operates the Suffolk County Sewer District (S.C.S.D.) No. 7 - Woodside (STP) located at the northeast corner of CR 101-Sills Road (aka Patchogue-Yaphank Road) and Harrison Avenue, Brookhaven, New York. The STP is operated in accordance with the New York State Department of Environmental Conservation (NYSDEC) State Pollutant Discharge Elimination System (SPDES) Permit Number NY0076988. Recent plant flow records are

[1] Personal Communication, Boris Rukovets, SCDPW to Robert Raab, D&B Engineers and Architects, January 23, 2013.

presented in **Table 3-2**, Woodside PS – Flow Records. The SPDES discharge effluent limits established in the permit are shown in **Table 3-3**, Woodside PS -Effluent Discharge Limits.

Table 3-2 - Woodside PS – Flow Records -2010 Discharge Monitoring Report Data

PARAMETER	QUANTITY	COMMENT
Permitted Flow	0.400 million gallons/day	Maximum Permitted Flow
Average Daily Flow	0.238 million gallons/day	
Maximum Daily Flow	0.279 million gallons/day	
Minimum Daily Flow	0.204 million gallons/day	

Table 3-3 - Woodside PS - Effluent Discharge Limits

PARAMETER	DISCHARGE LIMIT	COMMENT
Flow	0.4 million gallons/day	Maximum Permitted Flow
Total Dissolved Solids	1,000 mg/l	
Total Nitrogen as Nitrogen	10 mg/l	
pH	6.5 – 8.5	
Total Residual Chlorine	2.0 mg/l	When Disinfecting

The Woodside STP includes an influent pump station, bar screen, surge tank, three (3) circular aeration tanks with secondary clarifiers, three (3) multi-media filters and two (2) chlorine tanks. The effluent is discharged to the groundwater either through four (4) recharge basins and/or a series of leaching pools.

In the summer of 2012, the SCDPW, in order to insure an effluent discharge limit for Total Nitrogen of 10 mg/l, modified the operation of the treatment plant to a Modified Ludzack-Ettinger process. In this process, the aeration system is programmed to turn off periodically, allowing de-nitrification and nitrification to occur in the same tank. The length of the cycle time depends on the loading rate and the target limit. If the aerobic solids retention time (SRT) is sufficient to achieve nitrification, the cyclic process can reduce the Total Nitrogen in the effluent. The ranges of Total Nitrogen effluent concentrations have been found to be 3.1 mg/l to 10.4 mg/l[2]. Since the change in the treatment process, the STP has consistently met the Total Nitrogen effluent limit. At that time, to accommodate additional plant discharges, a series of leaching pools were placed along the easterly side of the treatment units. See **Figure 3-10.** These pools complemented the existing site recharge basins.

[2] Municipal Nutrient Removal Technologies Reference Document United States Environmental Protection Agency, September 2008.

For the proposed North Bellport service area, the SCDPW has identified 20,000 gpd that is unallocated and available for this project at its Woodside STP. As previously indicated, this allocation should handle the initial wastewater flow generated in the TOD and Hamlet Center. For this phase, the STP's capacity and recharge facilities will not have to be altered or expanded. However, to treat all the wastewater projected for the Bellport area as well as Bellport Village, the STP's capacity and recharge facilities will need to be increased to accommodate an additional projected average daily flow of 115,000 gpd. The County has conceptually agreed to expand the plant if the Town of Brookhaven makes available adjacent undeveloped properties for potential effluent recharge sites. It is envisioned that an additional circular aeration, secondary clarifier and filtration treatment unit(s) will be required to meet this demand. The components and configuration of future treatment units will have to be studied in detail by the SCDPW, as well as the positioning on the site to achieve proper setbacks. To accommodate this added effluent, additional recharge beds and/or leaching pools will need to be constructed to accept the treated wastewater. Due to spatial limitations at this facility as well as property setback requirements established by the SCDHS, the installation of leaching pools would be the most practical recharge alternative at this location.

The recharge facilities must be designed and configured in accordance with Suffolk County Department of Health Services (SCDHS), *Standard for Approval of Plans and Construction for Sewage Disposal Systems for Other Than Single-Family Residences, Appendix A,* December 1, 2009 (**Appendix No. 1**). Where leaching pools are to be used, the SCDHS requires that the system be designed on the basis of 10 gallons per day per square foot of sidewall for filtered effluent. The Standards also establish separation distances including buffer zones to a habitable building, a non-habitable building, and the property line. If leaching pools are to be utilized, a minimum separation distance of 25 feet must be maintained which includes the buffer area. It is also required that there is a minimum vertical separation of three (3) feet from the bottom of the pool to the highest recorded ground water level.

While the Woodside STP currently utilizes recharge beds, such units encompass large land area and require substantially greater setbacks with the distance to a structure or building setback and a property line being 400 feet and 300 feet, respectively. A 100 foot buffer to areas of substantial human use must be maintained as part of these distances. Spatial limitations would preclude the installation of future recharge beds at this site.

To accommodate the proposed Bellport wastewater flows, besides additional treatment units, it appears necessary for SCDPW to construct leaching pools at the Woodside STP facility with capacity to handle up to an additional 115,000 gpd of effluent. The SCDHS requires that "contiguous" space exists for redundant treatment facilities that can accommodate a 100%

expansion/replacement of the units or pools. A more stringent requirement has been established by the SCDPW, whereby an additional 100% discharge capacity above the SCDHS requirement be available in the leaching system. To utilize the Woodside STP, the Town of Brookhaven discussed the need to provide land to the County for the expansion of this facility. The Town has identified two (2) adjoining Town-owned parcels (**Figure 3-11)** for potential expansion which may be suitable to serve as buffers between plant facilities and adjoining residential parcels and potentially for the installation of leaching pools, they include:

- A 5.6 acre block of wooded parkland exists on the north side of Harrison Avenue and is situated immediately east of the plant. The approximate 500-foot square block of wooded parkland provides buffers to residences to the north and east. It could serve to satisfy the SCDHS' 25-foot buffer/setback requirement and allow leaching pools to be installed on the Suffolk County Woodside property to the common property line.

- A 2.7 acre stormwater recharge basin abuts the STP's northern boundary and provides storage for street runoff from a residential community to the east. This recharge basin is trapezoidal in shape. The recharge basin covers three acres according to Suffolk County tax map data, with estimated dimensions as follows; northern boundary – 255 feet, eastern boundary - 359 feet, southern boundary - 318 feet and western boundary – 458 feet. Based upon preliminary calculations provided by the Town, the basin is underutilized and ample space could potentially be reclaimed to accommodate the installation of a leaching pool system having the capacity (and redundancy) to handle North Bellport wastewater flows. Utilizing the southern tier of this basin should be adequate to house the pools and provide an adequate buffer zone from adjoining properties.

To recharge the 115,000 gpd of treated wastewater at the Woodside STP that will be generated from the North Bellport area and Bellport Village, twenty-four (24) leaching pools are needed to be constructed. The SCDHS's code requires that:

> "*An adequate area shall be available to allow for a minimum of one hundred percent (100%) expansion/replacement of the modified subsurface sewage disposal systems and small community treatment and disposal fgcilities. The area provided of expansion/replacement shall be contiguous to the planned location of treatment and disposal facilities*."

To comply with the SCDHS requirement an area for an additional twenty–four (24) leaching pools would need to be designated but not necessarily constructed. However, the SCDPW requires that two hundred percent (200%) redundancy of a leaching pool field for proper

operation and maintenance be provided. To comply with the SCDPW requirement an additional forty-eight (48) leaching pools for a total of seventy-two (72) leaching pools would need to be constructed. As shown in **Figure 3-12**, Proposed Leaching Pool Layout Plan, the proposed leaching pool configuration, consisting of seventy-two (72) pools, can be situated in the southern portion of the existing storm-water recharge basin. **Appendix No. 2** provides calculations prepared by the Town of Brookhaven to support the utilization of a portion of the stormwater recharge basin to house the pools.

In determining the number of pools required considering the space restrictions and setback requirements, three leaching pool depth scenarios were analyzed to calculate the number of pools needed to recharge the projected quantity of treated wastewater and meet the SCDHS and SCDPW redundancy requirements (**Table 3- 4**).

Table 3-4 - Number of Leaching Pools Required at the Woodside STP

Leaching Pool Depth (feet)	Number of Pools Based Upon 115,000 gpd	SCDHS Redundancy Requirement (100%)	SCDPW Redundancy Requirement (200%)	Leach Field Size (feet)
12'	32	64	96	360' x 160'
18'	24	48	72	270' x160'
24'	16	32	48	180' x 160'

The proposed leaching pool system, connecting piping and access/maintenance roadway would be positioned in the southern portion of the recharge basin just north of the Woodside STP property boundary. The remaining portion of the recharge basin would be retained for local storm water collection and would require re-grading to reconfigure basin benches, sidewalls, access roadways and influent piping. A minimum of twenty-five foot buffer would be required between the plant facilities and adjoining residential parcels.

During the preliminary design phase soil borings will need to be taken to determine the groundwater depth. Based on the groundwater depth the elevation of basin's bottom may need to be adjusted to maintain the required three (3) foot vertical separation.

Note: It has been reported by the SCDPW that the existing recharge facilities at the Woodside STP have performed poorly in the past, resulting in odor complaints. However, improved

maintenance efforts by County crews have been successful in reducing such incidents. Land space would prohibit the installation of additional recharge basins. Leaching pools, beyond the number discussed above may be needed on the site to provide additional discharge opportunities for the County. Also the leaching pool layout presented represents an 115,000 gpd expansion to the Woodside STP.

3.4 SEWERING APPROACHES

3.4.1 PROPOSED INSTALLATION OF SEWER SYSTEMS

As previously discussed, a draft study evaluating sewering needs for various communities including the Greater Bellport Area has been prepared for the Suffolk County Department of Public Works (SCDPW) and identifies wastewater improvements for portions of the Greater Bellport Area (Bellport Village and North Bellport). Recommendations include the installation of local sewage collection and conveyance systems for discharge and treatment at the Patchogue STP. For the Bellport Village portion as well as the conveyance of this wastewater to a proposed pumping station in North Bellport, a low pressure sewer (LPS) system is proposed. To service North Bellport a gravity sewers system would be utilized. With the availability of the Woodside STP, the use of the Patchogue STP became less desirable due to the overall distance required to convey the wastewater from Bellport to this facility.

Since it has been revealed by this Study that the more advantageous and expeditious wastewater treatment approach for the Bellport Area would be to utilize the Woodside STP in lieu of the Patchogue STP, it has decided to incorporate into this evaluation the proposed wastewater collections and conveyance strategies identified in the draft study and then investigate options for transporting the sewage from a central pumping station in North Bellport to the Woodside Plant. This option will require the eventual expansion of the STP to accommodate an additional 115,000 gpd of sewage of the 135,000 gpd projected for the Bellport area.

<u>Bellport Village Sewer System</u>

The use of a low pressure sewer (LPS) alternative to service Bellport Village in lieu of traditional gravity sewers (larger pipe sizes at deeper depths) was considered to be the best option for this hamlet as it offers the advantages of minimum disruption to public roadways and a reduced need for dewatering. The LPS system proposed consists of small diameter (1 ¼” to 4”) low pressure piping installed at shallow elevations thus reducing the need for extensive dewatering

operations, that would otherwise be required considering the relatively shallow elevation of groundwater found in this area.

Since this is a pressure system, each property would be equipped with individual pumping stations (grinder pumps) installed outdoors and below grade. The pumps are designed to carry the wastewater flow through small, 1 ¼" diameter pipes and force the flow from the property to the main roadway sewer (carrier system) consisting of 2 to 3 inch diameter piping. The main carrier lines are equipped with air relief valves at high points to allow the release of air bubbles that build up throughout the system. Drain manholes would also be provided to flush the pipes to accommodate maintenance. Clean outs are desired to be installed not more than 400 feet from each other. An advantage of using smaller diameter pressurized piping is that directional drilling techniques can be utilized. This method of installation has many positives in a developed area, since disturbance of the roadway and traffic can be minimized and final restoration reduced, offering a quicker and less labor intensive operation. The main carrier line for the LPS is planned to run along Station Road where it will transport the flow either into the North Bellport pumping station or a manhole in the proposed gravity collection system. The exact alignment for the piping system will be determined during future design exercises.

The wastewater collected in the Bellport Village will be conveyed to a new pumping station proposed to be located either immediately north or south of the Bellport Long Island Railroad (LIRR) train station. Two (2) locations were considered in this evaluation:

- The first proposed location for the pumping station is south of the LIRR tracks, between Station Road and Howell's Point Road, just north of Association Road.
- The second proposed location for the pumping station is north of the LIRR tracks between Michigan Avenue and Doane Avenue and situated off the south shoulder of Montauk Highway. The exact location and dimensions of this site will be defined based upon future investigations regarding property ownership and site surface and subsurface conditions.

North Bellport Sewer System

The proposed collection system for the North Bellport TOD and Hamlet Center, a gravity sewer system is proposed whereby collections sewers will be placed down each street. Flow will be conveyed to the proposed North Bellport pumping station. This piping system would be designed so that wastewater travels through the pipes within acceptable velocity ranges. If velocity is too low, solids settlement (blockages and destructive gas production) can occur. At high speeds pipe displacement and/or pipe wall scouring can result. The gravity piping system, typically consists of service pipes of 6-inch in diameter carrying the flow from each property

into the main street laterals running along the roadways. The minimum size of the main pipe would be 8-inch which would increase (if necessary) as the amount of flow collected in the area increases. The slopes of each pipe run would be designed to maintain adequate velocity. The pipe material proposed would be PVC SDR-35 (plastic) and will be placed at a depth ranging from 5 feet to 12 feet below street grade. There will be 48-inch reinforced concrete manholes not to exceed 400 feet from each other and whenever there is a convergence of two or more pipes or a turn/bend is necessary, a manhole will be provided to facilitate cleaning procedures. The system will terminate at the proposed North Bellport pumping Station which will be located either north or south of the LIRR, to the west of Station Road.

If the pumping station is to be placed north of the LIRR, a subterranean crossing of the LIRR tracks will be required. To accomplish this and maintain the proper pipe slope, horizontal directional drilling techniques will be employed. This would require the initial installation of a steel carrier pipe that would house the proposed HDPE gravity sewer.

It is estimated that the overall linear footage of gravity sewer required for the TOD and Hamlet Center area is approximately 3,600 linear feet. All developed properties, as well as vacant parcels, will be provided with sewer service connections that will be extended to the property line within the TOD and Hamlet Center. As the demand for sewers increases within North Bellport the collection system can be expanded. If all the areas within the North Bellport Planned Zoning Area were to be developed it is projected that the collection system could consist of nearly 25,000 linear feet of gravity sewers.

North Bellport Pumping Station

The proposed North Bellport pumping station will contain two or three submersible pumps with the ability to manage variable wastewater flows at all stages of the project. The pumps will be installed in a reinforced concrete wet well equipped with alarms to notify operators of pump failures, a ventilation system, and designed for safe access by operators. A reinforced concrete pit will house the manifold valve arrangement that allows the system to be operated on by-pass mode in case of power failure and to isolate any of the pumps at any given time in case of a mechanical breakdown. Provisions would be made to provide emergency backup power to the facility. The pumping station will accept sewage flow initially from the gravity sewer system proposed for North Bellport and ultimately form the anticipated LPS proposed for Bellport Village.

As mentioned, two sites have been identified for the pumping station. The selection will have an impact on the depth of the gravity sewer system as well as the initial cost of the project.

Depending upon the site of the proposed pumping station, certain modifications to the proposed collection system will be required. It is envisioned that at either site roughly 5000 square feet will be required to house the wet well, piping configuration, valve and flow meter pits, control building and backup generator. The following should be considered in the selection process:

- **South of the LIRR tracks**: A potential pumping station site is a vacant parcel south of the LIRR between Station Road and Howell's Point Road, just north of Association Road. This location was identified in a recent feasibility report being prepared for the SCDPW to study Bellport Village's sewering needs and would facilitate the connection of the gravity collection system proposed for the TOD as well as the proposed hookup of the LPS system proposed for Bellport Village. Sewage would be pumped from this station via a force main that would head north through the vacant parcel then tunneled below the LIRR tracks. Under this scenario, to tie in the proposed Hamlet Center collection system, a second tunneling exercise would be required below the LIRR tracks to transport sewage to the new pumping station. **Figure 3-13** provides a schematic of the proposed gravity collection systems with a pumping station positioned south of LIRR tracks. Note the exact location of the facility will be determined during the preliminary design stage when the physical conditions of the vacant parcel of land will be more closely analyzed.

- **North of the LIRR tracks**: The other potential pumping station site is in the south shoulder area of Montauk Highway (north of the LIRR) between Howell's Point and Station Roads. The exact location will be determined during the design stage and will be dependent on an assessment of the physical nature of the site and well as the future availability of the various parcels. In this scenario, gravity collections sewers from both the TOD and Hamlet Centers will tie into this station. The sewer connection from the TOD will require tunneling below the LIRR tracks. This operation would require the installation of a stainless steel carrier pipe that would ensure that the anticipated 8-inch PVC gravity pipe maintains the desired slope. Under this scenario the LPS force main from Bellport Village would tie into a manhole in the TOD gravity collection system on Station Road in the vicinity of Association Road. **Figure 3-14**. provides a schematic of the proposed gravity collection system with a north of LIRR track pumping station.

  Conclusion: Anticipated cost savings associated with tunneling only one pipe below the LIRR tracks as well as the convenience of tying in the gravity collection systems to the north and south, favor the selection of the north pumping station option as the preferred site.

Force Main Installation

The proposed pumping station will be designed to efficiently pump the wastewater flow collected in North Bellport and ultimately Bellport Village to the existing Woodside STP which currently has available capacity to accept 20,000 gpd of sewage. This will enable the initial stage of the project to take place without major modifications to the treatment plant processes. The flow will be transported via a force main system from the pumping station to the existing gravity sewer system located immediately south of the STP and Harrison Avenue. The proposed force main will tie into a manhole within this residential community (bounded by County Road 101, Sunrise Highway, Sundown Drive and Harrison Avenue), since this system, already currently connects to the STP. This gravity system is composed of an 8-inch plastic pipe and appears to possess adequate capacity to handle the projected flows.

The proposed force main system will consist of dual 3-inch HDPE DR-9 pipes interconnected to allow for the initial low flows to attain adequate velocities. Initially, it will be necessary for only one of the pipes to be operating while the second one will be dry and isolated, until future demands require its use. Valves will be located along the force main alignment, placed at a predetermined distance, which will provide the ability of isolating any run throughout the force main as needed. The exact route of the force main will be determined during the design. The selection will be based upon many factors with the key emphasis focusing on minimizing disruption to residents, roadways and existing subsurface utilities. The selection of acceptable locations for the proposed subsurface crossings of the LIRR tracks and Sunrise Highway will require substantial coordination and concurrence from regulatory agencies. For the purpose of this study, a sample route has been illustrated in **Figure 3-15**. The majority of the preliminary route selected runs along Atlantic and Taylor Avenues before crossing below Sunrise Highway. The final selection of the route will depend upon an assessment of the roadways including an identification of potential utility conflicts. The length of the force main is roughly estimated to be approximately 11,000 linear feet. Alternate routes running down adjoining streets would be considered, but in general, the force main lengths should be comparable. The force main system would be equipped with air relief and drain manholes as required. The use of the dual system will result in energy savings during the initial phase of the project as well as allow maintenance and repairs to be made without deactivating the system. Calculations related to the force main system, are present in **Appendix No. 3.**

This installation of the force main will require jacking of the dual 3-inch HDPE DR-9 force main under Montauk Highway and Sunrise Highway (Rte 27). If the North Bellport pumping station is located at the proposed southern site, it will be necessary to provide a subterranean crossing below the LIRR tracks as shown in Figure 3-13.

It is envisioned that the force main will be installed using open cut methods whereby the piping is placed within shallow trenches (4-10 feet in depth) that primarily follow the contour of the road surface. An overview of the general topographic contours can be seen in **Figure 3-16**. During the design phase it would be prudent to investigate the cost-effectiveness of installing the force main via jacking or directional drilling techniques. Possible time for installation could be accelerated and roadway disturbance and restoration could be reduced.

3.4.2 PHASED APPROACH AND FUTURE EXPANSION

The proposed North Bellport pumping station will be designed to convey the expected flow of 135,000 gpd. Provisions will be made to accommodate an initial lower flow rate which will increase as the demand for sewer services accelerates. It is projected that the 20,000 gpd of capacity available to North Bellport at the Woodside facility should provide the immediate needs of the TOD/Hamlet Center. Recent interest has been expressed by merchants and businesses along Montauk Highway, and therefore future tie-in to the sewer system to the north is a distinct possibility. In addition, the eventual connection of the Bellport Village system will increase the treatment needs at Woodside, and an eventual expansion of this plant will be required. The pumping station will be designed to efficiently handle the lower flows anticipated initially as well as the proposed design capacities.

3.4.3 POTENTIAL ENVIRONMENTAL IMPACTS AND COMMUNITY IMPACTS OF SEWERING

3.4.3.1 Environmental Assessment

It has been determined, that the introduction of sanitary sewer systems throughout the Study Area would have an overall beneficial impact on the North Bellport community and would provide the long-term solution necessary to address these potential environmental and health concerns. In addition, sewering would have the positive impact of stimulating local business opportunities ultimately promoting and encouraging community sustainability.

Throughout Suffolk County, local downtown business areas have become victims of the recent economic downturn. Contributing to the economic stagnation is the inability of existing or commercial and industrial facilities to expand and for new opportunities to materialize due to

limitations on their existing on-site sewage treatment systems and the SCDHS codes and regulations. While most dramatically experienced in the business community, new residential construction has stagnated, especially in regard to quality affordable, workforce housing.

The Town of Brookhaven as well as Suffolk County has been proactive in seeking sewering opportunities needed to revitalize downtown areas by either connecting portions of the local downtown business district to an existing treatment plant or constructing new treatment facilities (e.g. Ronkonkoma Hub). Such projects can provide a significant economic impetus to draw capital investment and entrepreneurial opportunities to these areas.

In the North Bellport area, no significant sensitive environmental resources such as streams, lakes, NYSDEC wetlands, the Central Pine Barrens, Special Groundwater Protection Areas, or other significant environmental features or districts have been identified. Motts Brook is located approximately 2,000 feet east of the study area and Bellport Bay is over a mile to the south. None of the Town's Blight-to-Light properties are situated in the North Bellport study. However, as additional density is proposed in the area, it is important to ensure that groundwater will not be adversely affected by additional sewer flow in the future. Adequate sewage disposal facilities must be provided to ensure the continued integrity of local groundwater supplies and area surface waters. The study area is located within Suffolk County Department of Health Services' Groundwater Management Zone VI. Groundwater Management Zone VI allows up to 300 gpd/acre of sewage flow before advanced sewage treatment facilities or transferred development rights are required. Suffolk County Water Authority (SCWA) service is available along Station Road, Montauk Highway, west of the intersection of Station Road and Montauk Highway, and along some of the secondary roads in the area. Existing water mains could easily be extended to service other locations within the study area. A water supply well field is present just southeast of the study area boundary limits, and the land surfaces of the node are positioned within the contributing area for this system. **Figure 3-2** depicts the locations of existing public wells, public well groundwater contributing areas, and water mains. Besides S.C.S.D. No. 7's Woodside STP facility there were no other sewer districts identified within or in close proximity to the node., besides a small STP that services the Bellhaven Nursing Home located on Beaver Dam Road.

Based on the USGS's Bellport topographic map, land surface elevations range from about 40 to 50 feet above mean sea level. Utilizing SCDHS groundwater contour maps, groundwater elevation in the study area was found to range between approximately 13-15 feet above mean sea level. Therefore, depth to groundwater would be expected to be about 25-37 feet below surface grade, which would be a positive factor when considering future STP effluent discharge options.

A large portion of the area has been designated as an Environmental Justice Area (see **Figure 3-4**). The NYCDEC Office of Environmental Justice have focused on specific areas, characterized by low income and minority demographics, in an effort to improve the environment in such communities by addressing projects that may result in a disproportionate adverse environmental impact. In North Bellport the EJ Area exists between Sunrise and Montauk Highways and runs east of North Dunton Avenue. It will be important during the design phase to work closely with the NYCDEC Office of Environmental Justice to insure that their requirements are adhered to. Refer to **Appendix No. 4** for information regarding the review process for projects within an EJ Areas.

The overall environmental impacts expected for the proposed project are related to the typical disruptions and inconveniences associated with roadway construction. While unavoidable and temporary in nature, such impacts can be reduced by careful planning, consistent communications and conscientious project management practices. It can be anticipated that at a minimum during construction:

- Noise and dust generation levels could be increased
- Traffic disruptions could occur and road closures may be necessary.
- Road surfaces will be disturbed.
- Land will need to be secured for a permanent pumping station.

CHAPTER 4.0: LEGAL/ADMINISTRATIVE CONSIDERATIONS

4.1 SUFFOLK COUNTY CODES

The Suffolk County Department of Health Services (SCDHS) retains responsibility to review sewage disposal facility plans for all new construction projects. Applications are submitted to the Department's Office of Wastewater Management ay the County Offices at 360 Yaphank Avenue, Yaphank. The approval process includes an approval to construct and a final project approval based upon a field inspection of the completed project. The requirements for sewage disposal must conform to state public health codes and Article 4, Article 6, Article 7 and Article 12 of the Suffolk County Sanitary Code. In general, any proposed project must comply with requirements that adequate sanitary disposal system can be constructed on the project site or that public sewers are available.

The SCDHS has issued technical standards and requirements for design and construction, including:

- Sewage Disposal Systems for Single-Family Residences
- Residential Standards
- Sewage Disposal Systems For Other Than Single Family Residences
- Commercial Standards

For this study and for future design efforts, various Suffolk County codes and guidelines are applicable. Of most relevance for this assessment were SCDHS documents including:

- *Standards for Approval of Plans and Construction for Sewage Disposal Systems for Other than Single-Family Residences* – Includes standards for wastewater generation rates and leaching pool and sewer system requirements.

- Appendix A – of the above document, *Standards for Construction of Modified Subsurface Sewage Disposal Systems and Small Community Sewerage Systems* – Includes separation and setback distances required at STPs

- Appendix C - of the above document*, Requirements of Department of Health Services and Responsibilities of Licensed Design Professional in Inspecting Sewage Treatment Works or Collection Systems* – Includes details for leaching pools system design and layouts.

Pertinent excerpts can be found in **Appendix No. 1.**

4.2 SUFFOLK COUNTY SEWER DISTRICT FORMATION OR INCLUSIONS

As part of planning for a new sewer system, consideration will need to be given as to whether North Bellport would:

- Form its own sewer district and make arrangements to discharge sewage at the S.C.S.D. No. 7 Woodside STP
- Request inclusion within the S.C.S.D. No. 7, requiring a boundary extension of the service area
- Become an independent customer to the S.C.S.D. No. 7 and tie into their system. The Town is currently in discussions with the Suffolk County Sewer Authority regarding this option.

As part of this analysis, provisions of New York State County Law would need to be reviewed to ascertain the most applicable option for North Bellport. Specially Article 5-A empowers each County to extend establish districts. It is quite possible that different approaches may prove beneficial for North Bellport and for Bellport Village. The most complex analysis would be related to comparison of short- and long-term cost benefits (initial inclusion fees, prorated costs for existing faculties, O&M costs, etc.) as well as long-term contractual security. District inclusion or formation would require the preparation of legal, technical and environmental documentation as well as what could be lengthy public information and approval procedures (a potential public referendum).

Projects that request connection to County districts are evaluated by the Suffolk County Sewer Agency staff with respect to the District's capacity, with recommendations made to the Agency. This requires that a formal SEQRA process be undertaken. Besides the standard Suffolk County user fee ($30/gal.) plus a 5% administrative fee, the contractee (North Bellport customers) must provide the necessary facilities (sewers, pumping stations, etc.) to convey their sewage to the Woodside STP. The agreement may also include provisions to share in the cost of future plant modifications. This option will be problematic for the Town and County to administer because it would require an individual contract for each connection made. A decision should be made very early in the process to avoid delays in implementing the financing and ultimately the construction. To streamline the sewering of Bellport's transit-oriented development and hamlet center area, the Town has received conceptual approval from S.C. Sewer Agency to become an independent customer.

4.3 PERMITTING

For a project of this magnitude, an array of federal, State, and local permits and approvals would need to be secured from the design stage through construction and implementation. At

a minimum, some involvement with the NYSDEC, NYSHD, SCDPW, SCDHS, MTA, NYSDOT, NYS Attorney General, SC Planning Commission, the Town of Brookhaven as well as local municipalities. This list could be substantially increased if state or federal monies are to be utilized. **Table 4-1** identifies potential approvals that may be necessary; however this is a projection and may be expanded as the details of the project are identified during design. State Agency approvals are typically contingent upon completion of the SEQRA process. If federal funding is anticipated, the NEPA process may come into play which may also ultimately result in the preparation of an Environmental Impact Statement. This would most likely be contingent upon the level and degree of negative impacts related to wetlands/floodplains, groundwater dewatering, economics, construction disruptions to traffic, noise, dust generation, property acquisition, historic and cultural resources, natural resources, etc.

Table 4-1 - Possible State and Federal Approvals

Agency	Permit/Approval	Responsible	Milestone
United States Fish and Wildlife Service	CFR Title 50, Part 17; Endangered Species Act; Informal Consultation	Designer	Prior to Design
New York State Office of Parks, Recreation and Historic Preservation	National Historic Preservation Act of 1966 Section 106; Consultation	Designer	Prior to Design
New York State Office of Parks, Recreation and Historic Preservation	Plan review in regard to the crossing of the Sunrise Highway	Designer	Design
United States Department of Interior	CFR Title 36, Part 800, National Historic Preservation Act of 1966 Section 106; Consultation required if Federal funding is used	Designer	Prior to Design

Agency	Permit/Approval	Responsible	Milestone
New York State Department of Environmental Conservation	Trench Dewatering Permit (if needed)	Contractor	Prior to construction
New York State Department of Environmental Conservation	ECL Article 17; Title 7 and 8; Article 70 NYCRR Title 6, Parts 750-757; SPDES General Permit for Stormwater Discharges from Construction Activities; and SWPPP	Designer / Contractor	Prior to construction
Suffolk County Department of Health Services	If "diesel" fuel is to be used for the standby generator, Article 12 of the Suffolk County Sanitary Code will require a permit.	Designer/ Contractor	Prior to construction
New York State Department of Transportation	NYS Highway Law Article 52; Highway Work Permit for Non-Utility Work	Designer / Contractor	During design
NYSDOT New York State Department of Transportation	NYS Highway Law Article 52; Highway Work Permit for Utility Work	Designer / Contractor	Prior to construction
MTA – LIRR	Railing Crossing Approval	Design	Prior to construction
Local Town and Municipality	Road Opening permits	Construction	Construction
NYSDEC Office of Environmental Justice	EJ Area Impacts	Design	Prior to Design

CHAPTER 5.0 SCHEDULING

5.1 IMPLEMENTATION STRATEGY

Based on the preceding analysis, a preferred sewering approach has been identified for the TOD and Hamlet Center. The proposed project consists of a gravity sewer collection system, a pumping station located north of the LIRR tracks, and a dual force main that will convey sewage to the Woodside/Farber STP. While funding availability will ultimately dictate the project's viability, we have developed a projected schedule with the assumptions that the required monies would be in place to proceed with the work. While a preferred route for the force main, as well as the location of the pump station will need to be defined, it is reasonable to expect that these project components will be placed on roadways/rights-of-way or vacant parcels that are not anticipated to present major adverse environmental impacts. The proposed collection system similarly will be placed on local roadways. The trenching required for piping and pump station installation appears to be above the local ground water table which would eliminate the need for dewatering. Based upon this premise, the following implementation strategy has been prepared.

The preparation of the Engineering Report would run concurrently with the environmental assessment effort. It is the intent that the Engineering Report and preliminary drawings could be completed in 8-10 months, assuming major impediments are not encountered. Some areas of concern which could lead to delays include:

- Project prioritization and/or funding issues.
- Additional technical and/or administrative demands associated with accepting funding (for example federal funding may require NEPA compliance).
- Coordination with the NYSDOT regarding the crossing of Sunrise Highway
- Coordination with the LIRR regarding the crossing of the tracks.
- Potential issues related to the formation; joining a sewer district or becoming a customer
- Receiving permit approvals in a reasonable timeframe.
- Major utility conflicts identified.
- Securing property easements and/or purchasing or obtaining land (eminent domain).

Once the Engineering Report is approved (Town and County) the contract documents (plans and specification) can be assembled. A minimum of a one year time frame (including securing the necessary permits and approvals) is projected for this exercise. Considering standard NYS procurement requirements for bidding construction projects, it is projected that the complete engineering process include the preparation of the plans and specifications could extend as much as 10-12 months.

It is projected that the construction phase would extend for an additional 10-12 months.

The following table presents a timeline to complete the proposed project. It is recognized that extensive and continuous coordination and cooperation would be required to realize a completed project by early 2016.

Table 5-1 - Projected Project Timeframe

ACTIVITY	PROJECTED TIME DURATION (1)	MILESTONE DATES
Start Process		April 2014-August 2014
Procure Design Consultant	4 months	August 2014
Engineering Design Phase	10 months	September 2014 – June 2015
Procure Contractor	4 months	July 2015 – October 2015
Construction Phase	12 months	November 2015 – October 2016
Completion Date		October 2016

(1) 30 month Project - Mid Point of Construction – May 2016

CHAPTER 6.0: CONSTRUCTION COST PROJECTIONS

6.1 PROPOSED PROJECT COMPONENTS

The proposed project will consist of a gravity collection system servicing the TOD and Hamlet Center, a pumping station and a force main that will transport sewage to the Woodside STP. Future expansion of the Woodside STP will be required which will be the responsibility of the SCDPW. Identifying the exact location of the pumping station and the alignment of the gravity collection systems and force mains piping will require further data collection and evaluation, which will be determined during the project design phase. The locations delineated for the various project components should be in the general proximity of where the final location should be, and as such projected costs should remain comparable.

6.1.1 SEWER SYSTEM ASSUMPTIONS

Pumping Station

- The North Bellport pumping station will be located either immediately north or south of the LIRR tracks and west of Station Road. As discussed the current preference is to position the station to the north.
- This facility will initially service the needs of the TOD and Hamlet Center and will have the capacity to accept sewage from the Village of Bellport.

Gravity Collection System

- Two gravity systems will be constructed, one serving the TOD and the other the Hamlet Center.
- All piping shall be 8 inch PVC and shall be installed at depths of 5-12 feet. Trench dewatering is not anticipated to be required.
- House service lines (main to property line) shall be 6 inch PVC. The cost for hooking up a structure from the building to the house/building as well as abandoning an existing on-site sanitary system would be the responsibility of the property owner.
- Directional drilling below the LIRR tracks and possibly Montauk Highway will be required.

Force Main

- Dual 3 inch HDPE pipes will be utilized, interconnected with valves along its entire alignment.
- The alignment shown in this study is a possible route. The most cost-effective, least disruptive alignment will be determined during the design phase.
- For this estimate, open cut installation methods are proposed at a depth of 4-8 feet.
- Directional drilling of the sewer piping will be required below the Sunrise Highway, Montauk Highway, and the LIRR tracks (if the southern pumping station location was chosen).
- The force main will terminate at a manhole in the area of Sunset Drive within the existing residential sewer system located immediately south of the Woodside PS.

6.2 CONSTRUCTION COST PROJECTIONS

6.2.1 CONSTRUCTION COST – INITIAL NORTH BELLPORT PROJECT

For the proposed North Bellport Sewering Project, cost projections have been developed for two pumping system options, the major difference being the location of the pumping station in regard to the LIRR tracks. Variations in costs primarily relate to the installation of the proposed gravity systems. These are depicted in **Table 6-1**. Detailed cost breakdowns can be found in **Appendix No. 5**.

Table 6-1 - Cost Comparison – Pumping System Options

SEWER SYSTEM COMPONENT	PUMPING STATION OPTION (1)	
	PUMPING STATION TO THE "NORTH" OF LIRR TRACKS	PUMPING STATION TO THE "SOUTH" OF LIRR TRACKS
FORCE MAIN	$5,501,347	$5,611,742
PUMPING STATION	$1,515,479	$1,519,640
GRAVITY COLLECTION SYSTEM	$5,167,,989	6,207,732
TOTAL	**$12,184,814**	**$13,339.114**

(1) Cost Qualifiers:

- The projected costs provided include design, construction and construction administration.
- Costs include estimates for typical roadway restoration.
- It may prove cost effective to utilize directional drilling for the installation of all or portions of the force main. This could accelerate the installation and substantially reduce road restoration requirements.
- Design and Construction Administration were estimated at 10% each.
- Private connection costs from a building to a new property line sewer service line are not included in this estimate. See below for typical costs for such connections.
- Costs associated with improvements/expansion to the existing Woodside Plant are not included.
- Fees associated with tying into the existing Sewer District as well as projected annual O&M costs are not included.
- The projection assumes that trench dewatering will not be required.
- The estimate does not include allowances for major utility relocations (water mains, gas mains, electrical ducts, storm drains, telephone, etc..) that may be required if it is determined that utilities will interfere with sewer pipe installation.
- It is assumed that all excavated material can be reused and it is suitable for backfill.
- The costs assume only roadway restoration within the trench area is required. The repaving or resurfacing of the entire street width has not been included.
- The base costs include several allocated markup percentages which are discussed in the following paragraphs.
- The costs developed include industry standard "Overhead and Profit" on labor of 21% (overhead assumed at 11% and profit 10%). A profit on materials of 10 percent was utilized.
- The data utilized in developing component costs is based on the year 2016. An escalation factor of 3.0% has been allocated into the major construction item costs. This escalation value will in effect bring unit costs to represent pricing for the midpoint of construction projected to be 2016.
- A 10% construction contingency has been included.

Locating the pumping station to the north of the LIRR appears to be the preferred option based upon projected construction costs and overall accessibility. This centrally located site offers convenient tie-ins from both gravity collection systems. Both options would require subterranean crossings of Sunrise and Montauk Highways, as well as the LIRR to tie into the Woodside STP. If the pump station is located to the north, a gravity sewer line will be run below the LIRR tracks. This sewer will carry the flow from the TOD and Hamlet Center as well as the Village of Bellport. A southern location for the pumps station has the potential for two LIRR crossings, one being the force main exiting the station and the second being a gravity line bringing flow to the station from the Montauk Highway Corridor. We have included the cost of the future gravity line in the cost estimate since doing two crossing at the same time would be cost-effective.

6.2.2 PRIVATE SEWER SERVICE CONNECTION – TYPICAL INSTALLATION COST

The project as proposed would provide sewers for each street in the TOD and Hamlet Center. Included within these mains would be a service connection extending to and terminating at the

property line. To utilize the sewer system, the owner of an existing building or a future structure would be required to install a sewer pipe house connection from their structure to the house connection stub at the property line. In cases where an on-site sewage system is being utilized, this would have to be abandoned consistent with SCDHS requirements. The cost of such building connection lines is relative to the length of piping required. The following table provides typical costs based upon linear feet of piping. The costs can vary greatly depending upon site obstructions and utility locations.

Table 6-2 - Property Owner's Costs (Typical) to Connect to Municipal Sewer System

DISTANCE FROM PROPERTY LINE SEWER HOOKUP TO BUILDING FOUNDATION (LINEAR FEET)	TYPICAL INSTALLATION COST OF GRAVITY SEWER SERVICE CONNECTION ($) (1)(3)		
	PLUMBING CONNECTION AT BUILDING (2)	PIPING TO CURB ($)	TOTAL ($)
50	$1,100	$3,900	$5,000
100	$1,100	$8,300	$9,400
150	$1,100	$12,600	$13,700
200	$1,100	$17,000	$18,100

(1) Gravity sewer services to be minimum 6 inch diameter PVC piping
(2) Cost includes tie in/reconfiguring of house piping systems but not abandonment of septic system
(3) Cost figures obtained from the Sewer District No.3 – SWSD Area – Expansion Study (CP-8139) prepared for the SCDPW (September 2012)
(4) Estimated $4,000 for typical residential septic system abandonment.

6.2.3 BELLPORT VILLAGE SEWER SYSTEM INCLUSION

A recommendation of a draft feasibility study being prepared for the SCDPW for Bellport Village is to provide sewers for that community to reduce the potential for groundwater pollution from failing on-site sewage systems as well as to provide an economic stimulus for area businesses. Due to the high groundwater conditions in the area, the study proposed the installation of low-pressure sewer (LPS) system. Such a system utilizes small diameter, shallow pipes that rely on pumping to force the sewage to a disposal point. As a result a grinder pump is required as part of the on-site piping system at each property. The study suggests pumping sewage from the LPS system north along Station Road and tying into a pumping station located in North Bellport. Wastewater generated in both of these communities would then be pumped west on Montauk

Highway to a connection point in the Patchogue sewer district. With the recent analysis indicating the Woodside as available and the preferable location for treatment, a revised conveyance strategy, as presented in this study, has been identified.

The following table (Table 6-3) provides estimated costs generated from the SCDPW Bellport Village report regarding the Village LPS. While the ultimate disposal destination is being reassessed, the sewering costs provided remain relevant.

6.2.4 SUFFOLK COUNTY SEWER CONNECTION FEE

The Suffolk County Connection Fee is presently set at $30 per gallon per day of flow. This fee is imposed on all property hookups to a County sewage system. For example, for a single family home, Suffolk County utilizes a 300 gallon per day flow for single family homes, so a connection fee would be $9,000. Discussions have occurred between the Town and Suffolk County that may reduce the connection fee in exchange for expanding into a Town recharge basin, located north of the Woodside STP. Final connection fees will be determined with final Sewer Agency approval.

Table 6-3 - Future Suffolk County Sewer Connection Fee (1)

SERVICE AREA	*UNIT PRICE*	*FEE*
North Bellport **Initial 20,000 gallons (currently available at Woodside STP)**	$30/GALLON	$600,000
North Bellport **55,000 gallons (remainder of projected flow – subject to plant expansion)**	$30/GALLON	$1,650,000
Bellport Village – Projected flow of 60,000 gallons - subject to plant expansion)	$30/GALLON	$1,800,000
135,000 gallons		**$4,050,000**

(1) Based on a total flow of 135,000 gpd
(2) Estimates may be reduced to reflect any land received from the Town of Brookhaven.

6.3 FINANCIAL CONSIDERATIONS

The current climate for securing substantial government funding in the form of grants or loans for sewering projects is becoming an option. However, in Suffolk County competition for sewering money will be quite fierce as numerous sewer studies are being finalized for various villages and hamlets that are facing similar economic and environmental issues. The most realistic approach for securing the necessary funds may be through municipal/private partnerships, where business entities can provide the finances required and the local

governments can assist in expediting the construction process and providing tax incentives. Some commonly utilized funding avenues include:

- The Clean Water State Revolving Fund Program. This agency offers low interest, short term loans for wastewater and water projects.

- State and Federal Community Block Grant Programs which encourage economic development projects.

- The New York State Environmental Facilities Corporation (EFC) which provides funding to municipalities acting on behalf of local businesses for wastewater projects under their Financial Assistance to Business (FAB) Water Program.

- Suffolk County funding may be available for sewering projects. However due to the number of projects that could be available for implementation, securing these funds could be competitive.

Besides bonding this project by the Town, securing all or partial funding will be challenging. There may be an advantage however in securing financial assistance from the County, if the project can be designed and ready to implement on an expedited schedule. Currently, the County has been using in their cost projections for sewering feasibility studies, the Year 2020 as the midpoint of construction.

CHAPTER 7.0: CONCLUSIONS AND RECOMMENDATIONS

7.1 RATIONALE FOR SEWERING

The sensitivity of Suffolk County's groundwater supply has had and will continue to have a direct impact on future economic development. Recent studies have identified the potentially deleterious, long-term impacts to groundwater associated with on-site wastewater systems discharges. As a result regulations have been promulgated by the Suffolk County Department of Health Services (SCDHS) which greatly restrict the size of on-site systems in an effort to preserve and safeguard the County's water resources. To address these restrictions, centralized wastewater treatment opportunities are being sought by the Town of Brookhaven to stimulate development. The North Bellport community represents a key area where TOD and Hamlet Center is viable. Providing sewers for the mixed use commercial/residential area will allow greater density and opportunities for existing establishments to expand and attract new business. The potential for the construction of multi-family, quality affordable (work-live) housing also exists.

The scope of this Study was to develop and analyze various wastewater management opportunities within Study Area boundaries that would help reduce human health concerns, maintain the quality of area water resources and potentially provide a stimulus for the local economy. The primary goal of this evaluation was to design a sanitary sewer system for the Study Area, which had been previously identified as the preferred approach for achieving immediate and long-term environmental and economic benefits. As part of this exercise, vacant parcels within the area were studied to determine their potential to support a sewage treatment plant (STP). In addition existing STPs within close proximity were assessed to determine if existing treatment capacity was available or if expansion was feasible to accommodate sewage generated in the designated North Bellport TOD and Hamlet Center area.

The analysis of the vacant parcels revealed that the S.C.S.D. Woodside STP located north of the Sunrise Highway not only had available capacity but the site had the potential to support facility expansion.

7.2 SEWERING SCENARIOS

With the availability of the Woodside STP being identified early in the study process, it was possible to focus efforts on the potential sewering scenarios. The intent was to provide sewers for the area defined as the North Bellport TOD and Hamlet Center, but also allow future

opportunities to include sewage form prospective development along the Montauk Highway and Station Road Corridors. In addition, it was noted by the SCDPW that there was a need for sewers in the neighboring community of Bellport Village that should be incorporated in the overall sewering strategy for the Greater Bellport area.

For planning purposes, anticipated wastewater flows were provided by the Town and SCDPW for the prospective services areas, as follows:

Table 7-1 – Projected Project Flows

Service Area	Projected Wastewater Flow (gpd)
North Bellport TOD and Hamlet Center	75,000
Bellport Village	60,000
Total	**135,000gpd**

A gravity sewer system was developed for each street within the Bellport TOD and Hamlet Center. Flow from this system would be directed to a local pumping station. From this station, the sewage would then be pumped to the Woodside STP, located north of Sunrise Highway. Numerous options for the routing of this force main through local streets were identified during the evaluation. For this report a typical alignment is illustrated. To reduce significant traffic disturbance the force main would be tunneled under Montauk Highway. The force main would terminate in a manhole within an existing sewer collection system located south of the Woodside STP.

A low pressure sewer (LPS) system is being proposed for Bellport Village and was included as part of a recent sewering feasibility study prepared for the SCDPW for the Village of Bellport. Under this scenanio, wastewater generated in Bellport Village would be pumped either to the proposed North Bellport gravity system or into the new pump station.

7.3 PHASED APPROACH TO SEWERING

The SCDPW has indicated that 20,000 gpd of capacity would be allocated for North Bellport at its Woodside STP. However, there is allocated unused flow of 140 gpd that may be available prior to plant infrastructure upgrades. Future flows in excess of this figure would require an expansion of the plant. It is envisioned that this capacity would be sufficient to handle initial flows generated once the North Bellport sewer system is completed. Having the sewer system

in place coupled with expanding the plant in the future will provide many advantages for the Greater Bellport Area including the TOD area and proposed development to the north. At some point, Bellport Village can tie in. As the need materializes in North Bellport, the sewer system could be expanded to accept wastewater from potential development along:

- Proposed development area north of Montauk Highway consistent with North Bellport's community vision.
- The Montauk Highway and Hamlet Center.

7.4 INFRASTRUCTURE REQUIREMENTS

The SCDPW has indicated that 20,000 gpd of existing capacity at their Woodside facility would be allocated for flow generated in North Bellport. This should handle initial flows collected in the new sewer system. When flow increases above this figure are envisioned and/or as a schedule for the implementation of the Bellport Village LPS system has been developed, it will be necessary that the Woodside STP be expanded to accept a minimum of 115,000 gpd of additional sewage. This will require additional treatment processes as well as be the installation of a series of leaching pools to dispose of the treated effluent. This will require a major commitment of time and funds, as a lengthy administrative process is undertaken; whereby environmental assessments are performed, detailed plans and specifications are prepared and regulatory reviews and approvals are secured.

The installation of sewers in the TOD and Hamlet Center will result in temporary disturbance of the roadways. Since this area may potentially become a major commercial center, the overall condition of the road systems will be paramount in attracting new business. It may be prudent to consider trench restoration initially. Whether the entire road would require an asphalt overlay will need to be decided and may depend upon the long-term development strategy for the area. Ultimately a complete restoration of the road system including utility upgrades, new sidewalks and curbs, lighting, landscaping, drainage etc. may be contemplated.

A pumping station can present aesthetic issues for the community. To avoid this situation, the exterior of the superstructure should be visually appealing and be architecturally consistent with area structures. Appropriate landscaping and signage and security fencing should be considered.

Construction costs could vary substantially based upon identified conflicts or regulatory agency requirements. Once the project is bid and contracts awarded it is anticipated that construction will take between 12 and 18 months to complete.

7.5 LEGAL REQUIREMENTS

The legal requirements associated with joining a sewer district, forming a new district or connecting into an existing district (as a contractee) has been briefly discussed in this report. It is likely that the legal aspects of expanding or creating a sewer district will be on the critical path of the project schedule because legislative approval, special election approval and NYS Comptroller approval must be obtained subsequent to securing SEQRA approval in order to appropriate funding for design, construction and construction management of the sewer system and interceptor extensions.

7.6 SOCIAL IMPACT

Installation of sanitary sewers within the Study Area will provide relief for businesses that are considering expansion but are burdened by SCDHS restrictions related to maximum permissible discharges to on-site wastewater system, thereby creating more employment opportunity, enhancing the tax base, and reversing the declining economic conditions. Also, newly sewered areas will typically experience an increase in overall property values.

7.7 ENVIRONMENTAL IMPACT

As discussed, environmental impacts for this sewering program will likely go through an extensive SEQRA review process culminating in DEIS, FEIS and SEQRA Findings documents, whereby an array of analyses and studies will be conducted to ensure that potential significant environmental impacts are identified and can be mitigated through engineering design, best management practices, or other means. The SEQRA process strives to include public outreach and participation in the environmental review and decision making process. In addition, because several State and federal permit actions will be needed to implement the project, there will also be opportunity for community and stakeholder involvement at that level as well. It is apparent that the environmental improvements (groundwater and surface water quality enhancement), public health improvements (elimination of failing or marginal on-site systems),

and economic / social opportunities gained through sewering, will likely outweigh potential impacts from construction and operation of an expanded sewer system.

The Town is preparing a land use plan and environmental impact statement for the proposed sewer area.

Enhanced public outreach will also be required, particularly as it relates to the SEQRA process and any possible effects on North Bellport's Environmental Justice Area. It is however, anticipated that construction of sewers in North Bellport would enhance the community, both economically and environmentally, rather than detract from it.

7.8 SEWERING COST

Capital costs associated with the overall construction of the proposed initial project consisting of the TOD and Hamlet Center collection system, pumping station and force main, as well as associated design and construction administration is projected to range between $10-12 million. These cost figures are significant, particularly under present economic conditions. In addition, additional costs associated with Suffolk County Sewer Connection Fees, Sewer District charges, private property hook-up costs, and long term operation and maintenance costs will need to be factored into the total impact to the community and Town. For an initiative of this magnitude to be implemented, an array of funding opportunities may need to be explored. State and Federal grant funding related to downtown revitalization, housing, transit-oriented projects, economic development or other programs need to be considered.

Legend

- SEWAGE TREATMENT PLANTS
- NORTH BELLPORT NODE BOUNDARY
- PROPOSED_ZONING
- MIX (WORK/LIVE UNITS)
- J4
- J6
- EXIST PARK
- PARKS
- MF

0 800 Feet

N W E S

Cashin Associates, P.C.

db

A Joint Venture

FIGURE 2-1
TOWN OF BROOKHAVEN
NORTH BELLPORT
SEWER FEASIBILITY STUDY
FUTURE ZONING

As Indicated on the 2009 Community Vision Plan

FIGURE 2-2
Land Use Plan

TOWN OF BROOKHAVEN
NORTH BELLPORT
SEWER FEASIBILITY STUDY

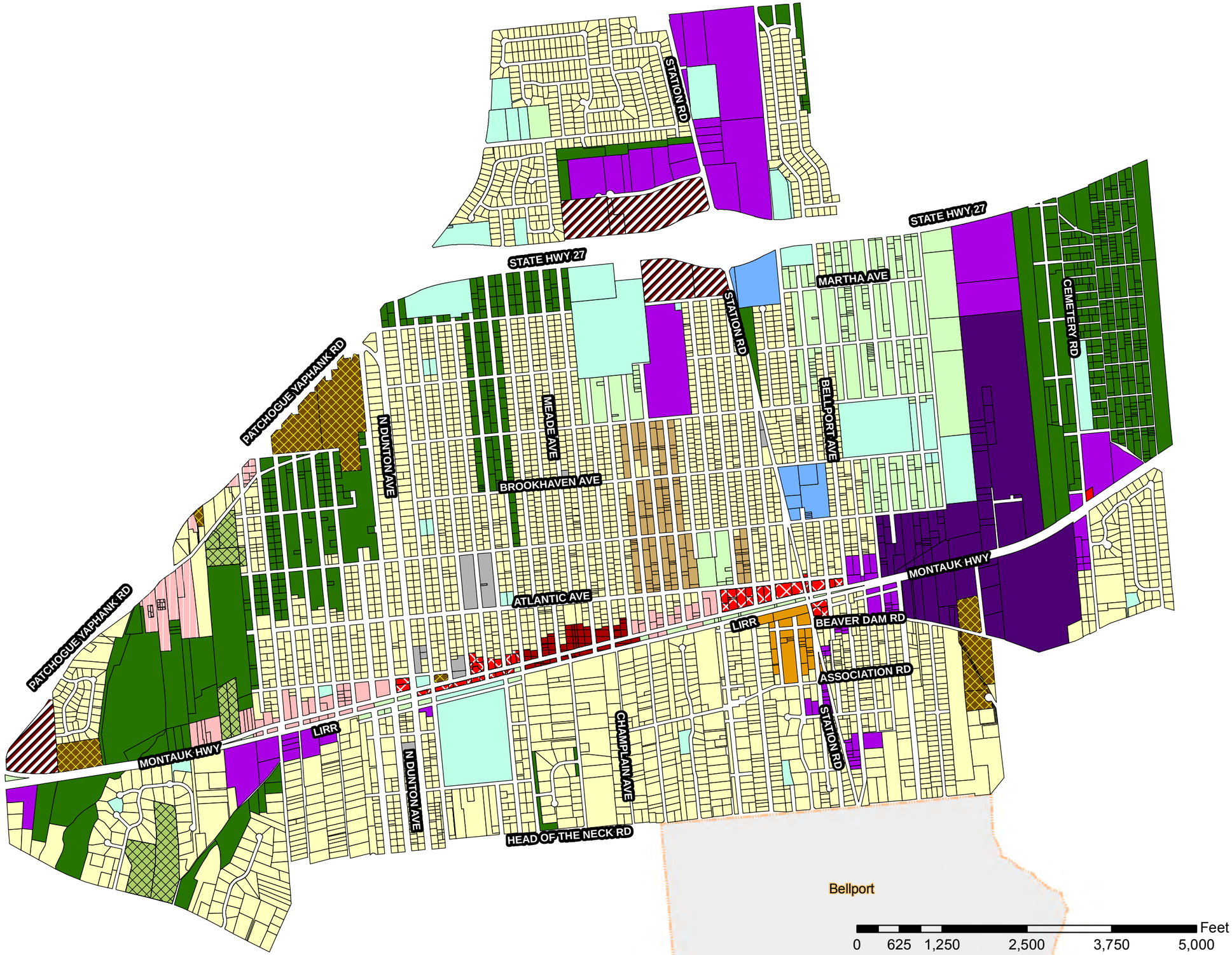

Legend

- Opporunity
- Agricultural
- Medium_Density_Residential
- Medium_High_Density_Residential
- High_Density_Residential
- TOD
- Transition
- Office
- General_Commercial
- Main_Street
- Commercial_Center
- Heavy_Commercial
- Light_Industrial
- Heavy_Industrial
- Public_Assembly
- Institutional
- Park
- Open_Space
- Villages83

This map should be used in conjunction with the Greater Bellport Land Use Plan. The map itself does not constitute the land use plan, nor should the map be utilized on its own to determine proposed land use for a specific location.

BELLPORT,
NEW YORK

JS August 2012

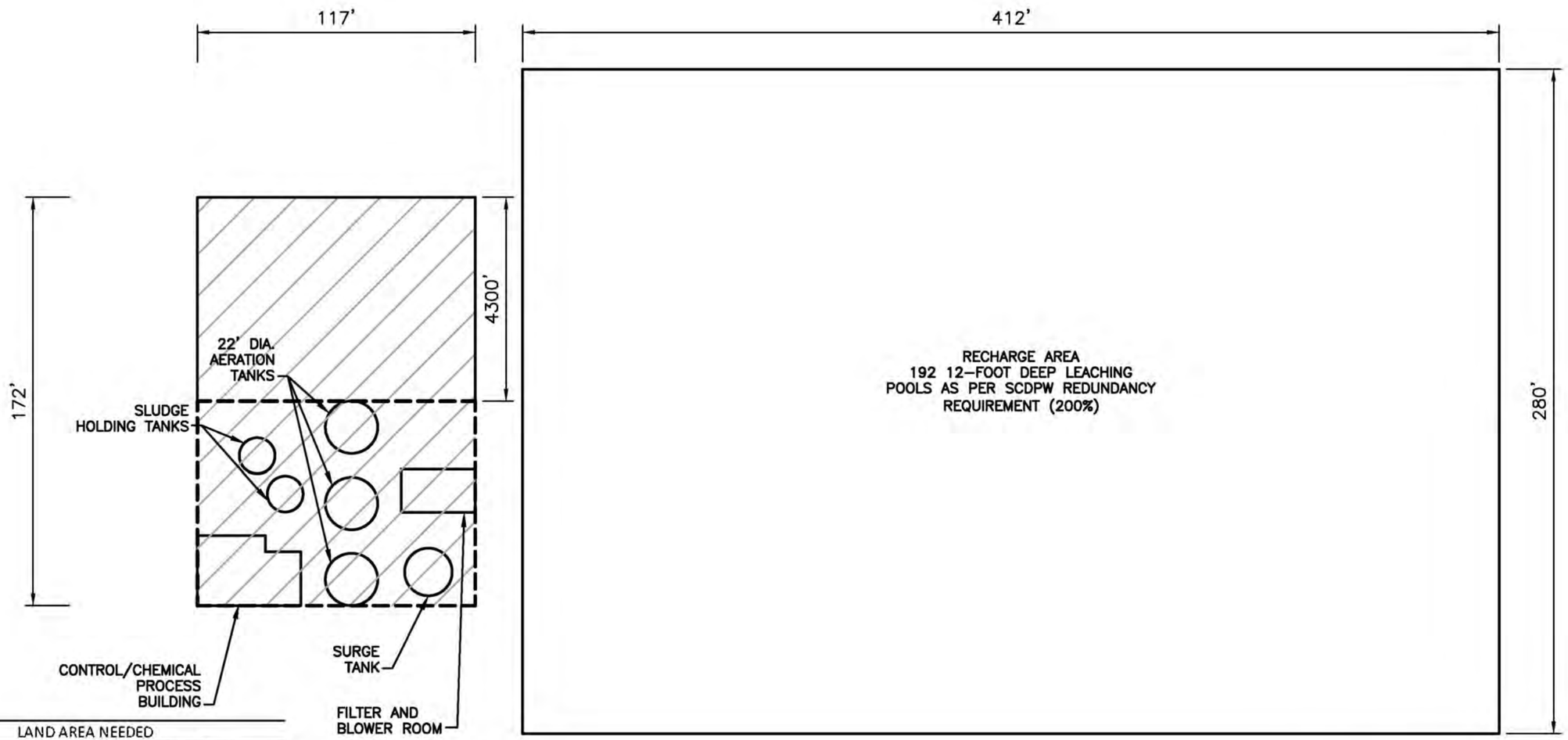

LAND AREA NEEDED	
USE	SITE COVERAGE (APPROXIMATE)
STP WITH 100% REDUNDANCY (1)	22,000 SF (0.46 ACRES)
LEACHING POOLS WITH 200% REDUNDANCY (2)	115,000 SF (2.7 ACRES)
TOTAL	**137, 000 SF (3.16 ACRES)**

(1) SCDHS REQUIREMENT
(2) SCDPW REQUIREMENT

LEGEND:

AREA REQUIRED FOR SEWAGE TREATMENT PROCESSES AND EQUIPMENT.

100% REDUNDANCY AREA AS PER SCDHS FOR SEWAGE TREATMENT PROCESSES AND EQUIPMENT.

A Joint Venture

TOWN OF BROOKHAVEN
NORTH BELLPORT SEWER FEASIBILITY STUDY

SCALE:1"=50±

LAND AREA NEEDED: 135,000 GPD STP [WITHOUT REQUIRED SETBACKS]

FIGURE 2-3

F:\3083\3083-STP_SITE PLAN_135K GPD_FIG 3-XX.dwg, 4/23/2013 12:07:51 PM, DWG to PDF-OVER.pc3

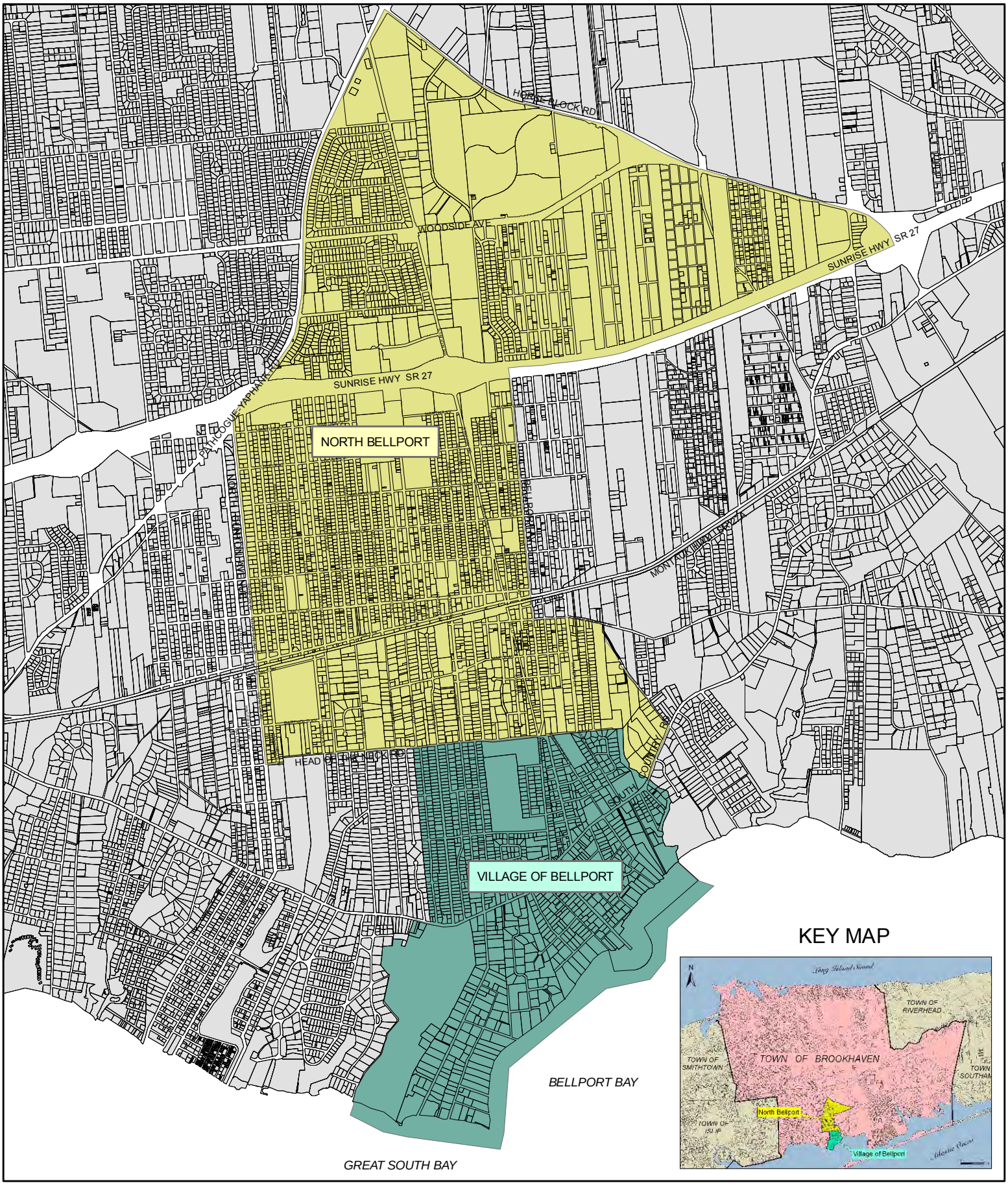

Cashin Associates, P.C.

A Joint Venture

N

0 3,000 Feet

FIGURE 3-1
TOWN OF BROOKHAVEN
NORTH BELLPORT
SEWER FEASIBILITY STUDY
LOCATION MAP

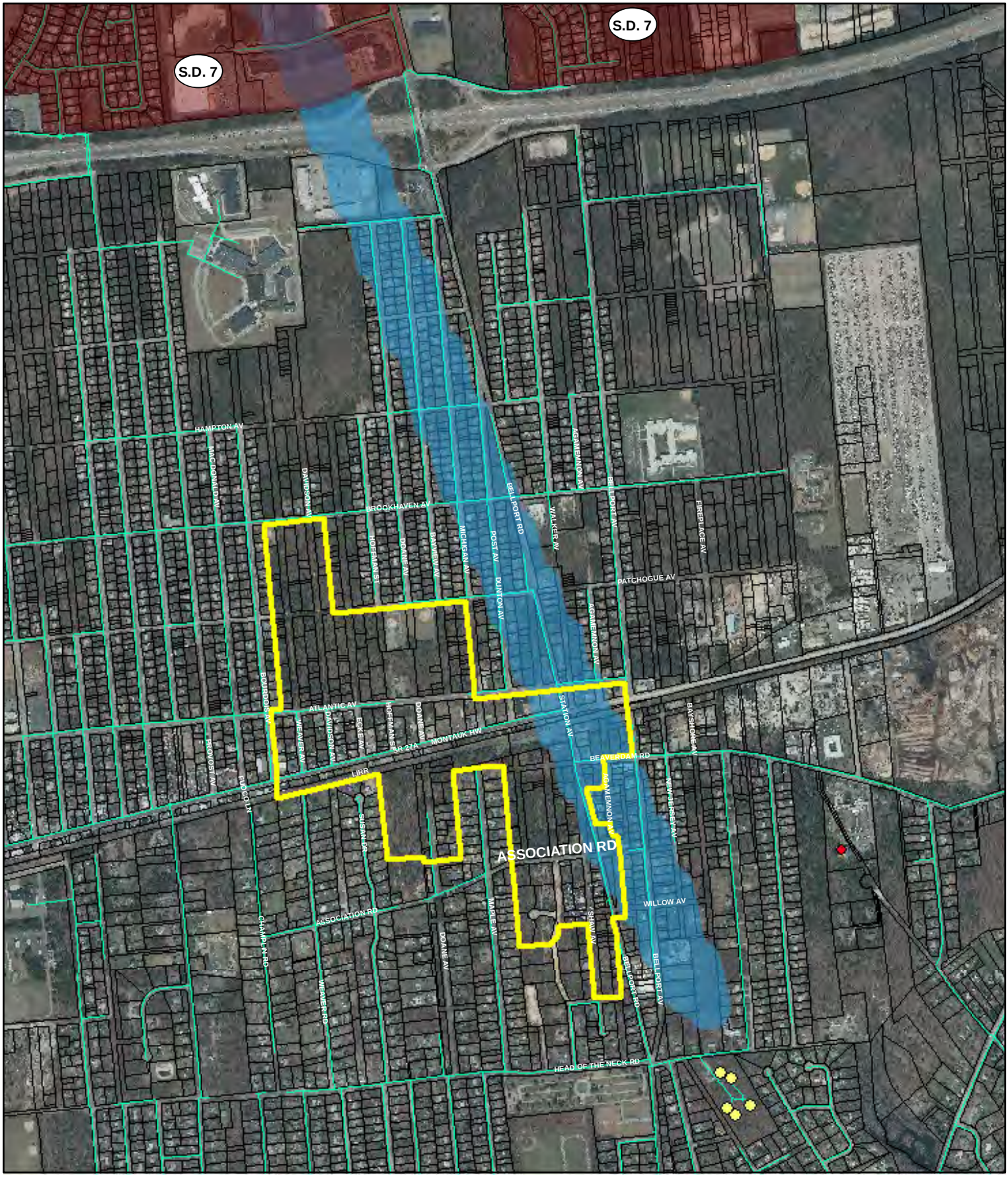

Legend

- NORTH BELLPORT NODE BOUNDARY
- SEWAGE TREATMENT PLANTS
- SCWA PUBLIC WELLS
- SCWA WATERMAINS
- SEWER DISTRICTS

GROUNDWATER CONTRIBUTING AREA

GROUNDWATER TIME OF TRAVEL

- 1 YEAR TIME OF TRAVEL
- 100 YEARS TIME OF TRAVEL

N
W E
S

0 1,000 Feet

Cashin Associates, P.C.

db

A Joint Venture

FIGURE 3-2
TOWN OF BROOKHAVEN
NORTH BELLPORT
SEWER FEASIBILITY STUDY
WELLS AND WATERMAINS

Cashin Associates, P.C.
db
A Joint Venture

N

0 1,000 Feet

FIGURE 3-3
TOWN OF BROOKHAVEN
NORTH BELLPORT
SEWER FEASIBILITY STUDY
SITES 1 - 5

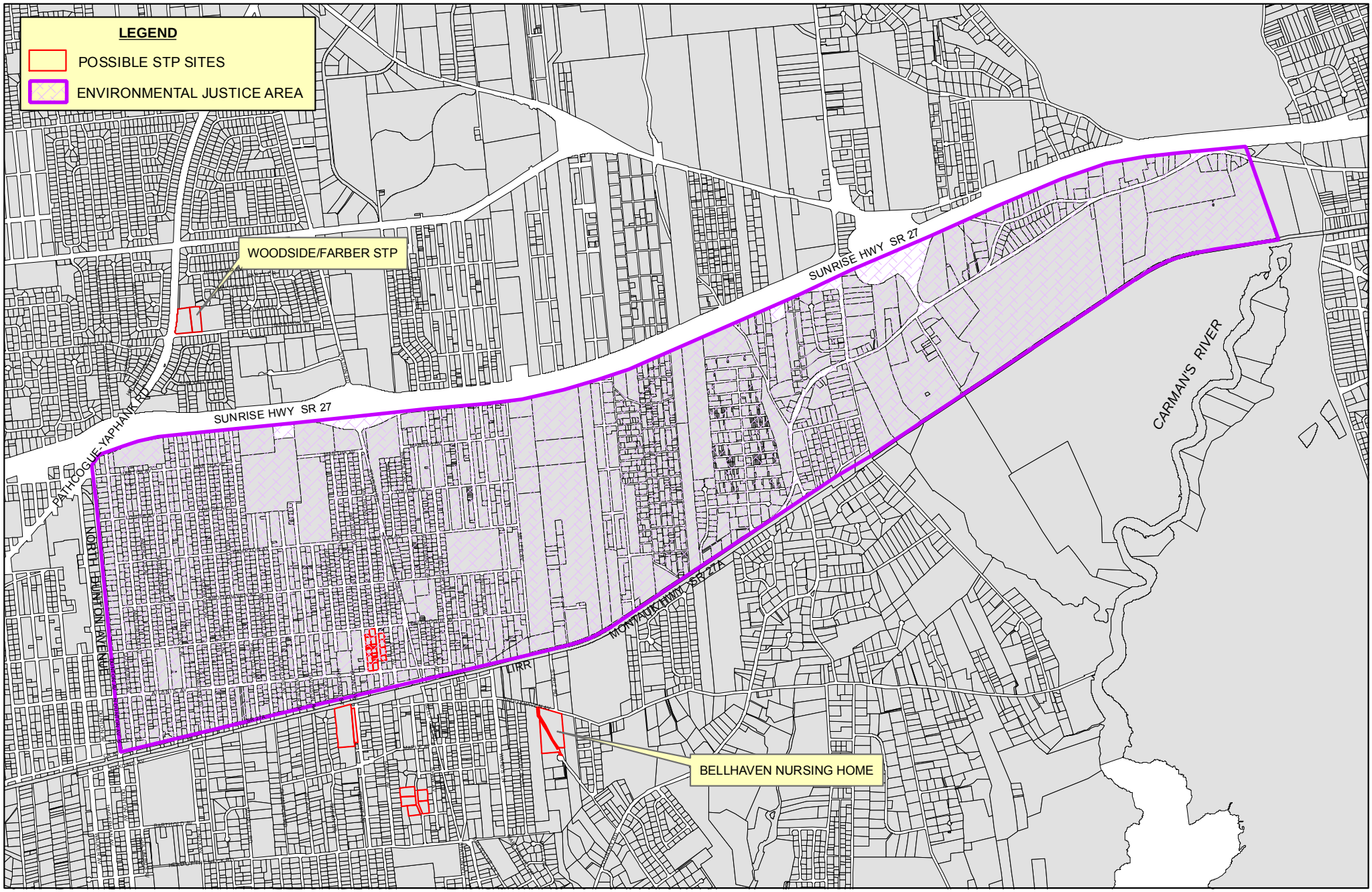

Cashin Associates, P.C.
db
A Joint Venture

N

0 3,000 Feet

FIGURE 3-4
TOWN OF BROOKHAVEN
NORTH BELLPORT
SEWER FEASIBILITY STUDY
POTENTIAL NYSDEC
ENVIRONMENTAL JUSTICE AREA

Cashin Associates, P.C.
db
A Joint Venture

N

0 100 Feet

FIGURE 3-5
TOWN OF BROOKHAVEN
NORTH BELLPORT
SEWER FEASIBILITY STUDY
SITE 1
BELLHAVEN-STP BEAVER DAM ROAD

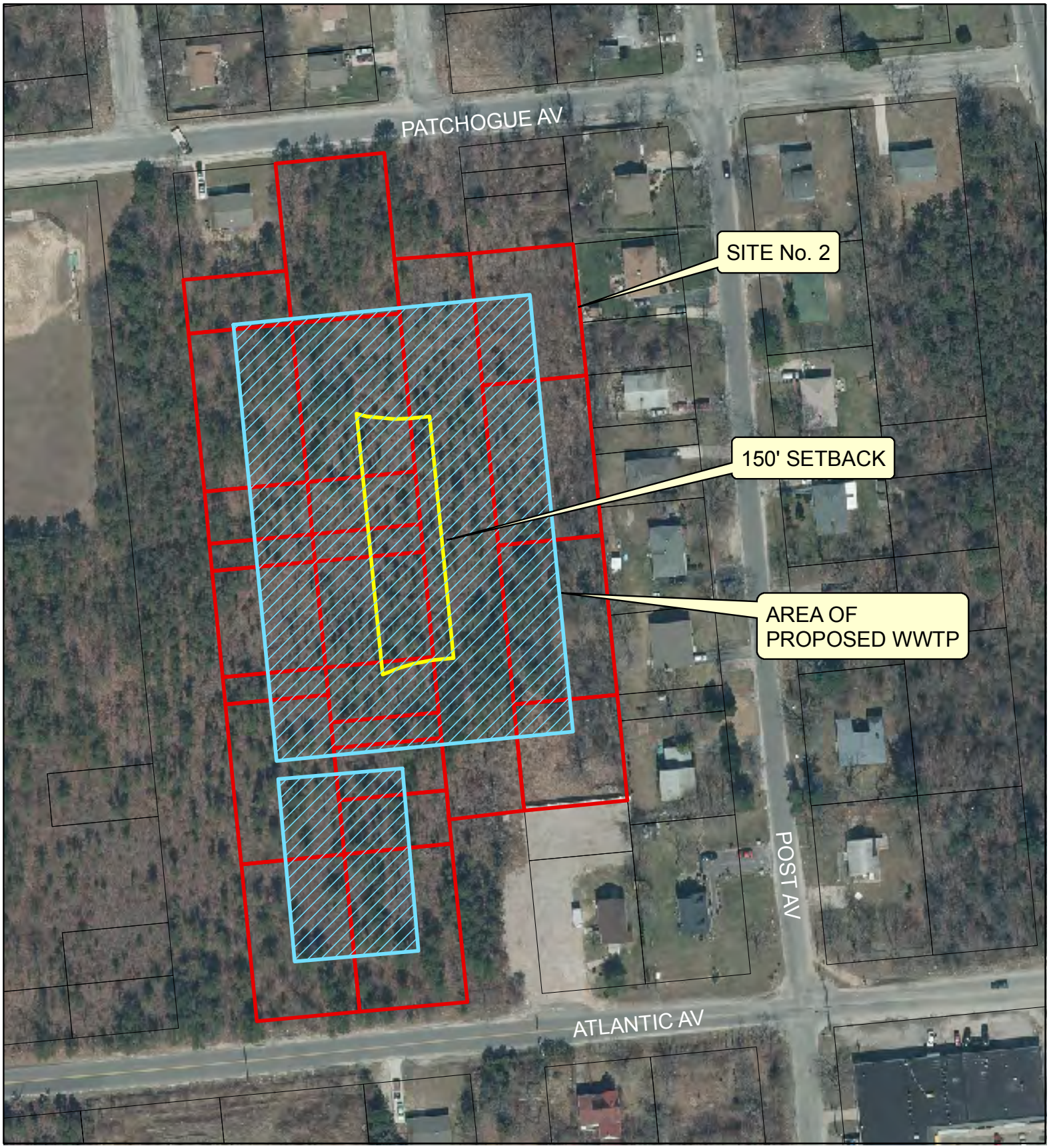

Cashin Associates, P.C.
db
A Joint Venture

N

0 100 Feet

FIGURE 3-6
TOWN OF BROOKHAVEN
NORTH BELLPORT
SEWER FEASIBILITY STUDY
SITE 2
N/S ATLANTIC AVE, W/S MICHIGAN AVE

N

0 100 Feet

Cashin Associates, P.C.
db
A Joint Venture

FIGURE 3-7
TOWN OF BROOKHAVEN
NORTH BELLPORT
SEWER FEASIBILITY STUDY
SITE 3
W/O STATION ROAD, S/S ASSOCIATION ROAD

N

0 100 Feet

Cashin Associates, P.C.

db

A Joint Venture

FIGURE 3-8
TOWN OF BROOKHAVEN
NORTH BELLPORT
SEWER FEASIBILITY STUDY
SITE 4
NORTHERN TERMINUS OF
DOANE AVE. & S/S LIRR ROW

N

0 100 Feet

Cashin Associates, P.C.
db
A Joint Venture

FIGURE 3-9
TOWN OF BROOKHAVEN
NORTH BELLPORT
SEWER FEASIBILITY STUDY
SITE 5
WOODSIDE / FARBER / DPW
EXISTING PLANT

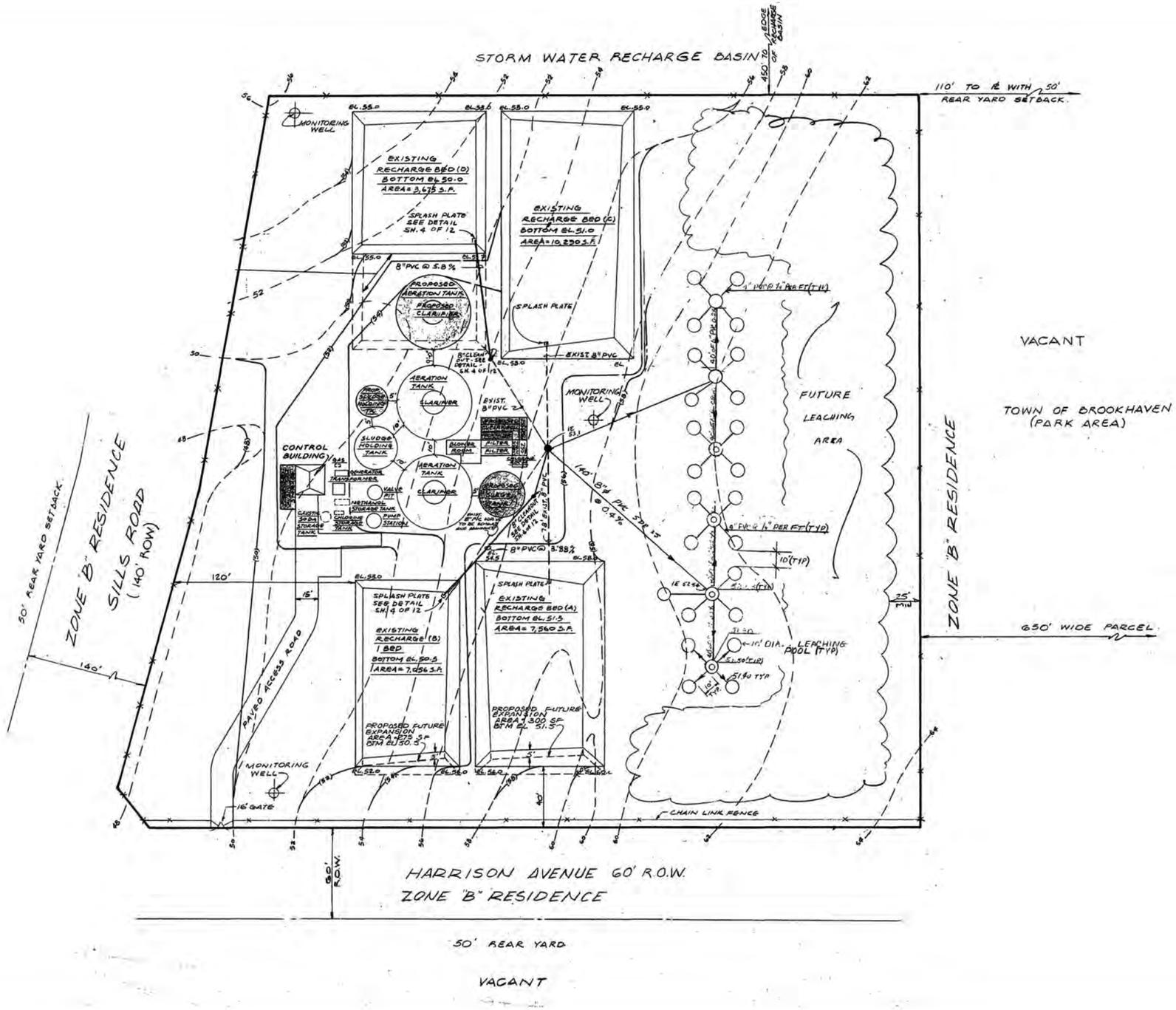

TOWN OF BROOKHAVEN
NORTH BELLPORT SEWER FEASIBILITY STUDY

SCALE:1"=75'±

S.C.S.D. No.7 - WOODSIDE SEWERAGE TREATMENT PLANT - EXISTING SITE PLAN

FIGURE 3-10

A Joint Venture

F:\3083\3083-STP_SITE PLAN_FIG 3-10.dwg, FIG 3-10, 2/28/2013 3:02:47 PM, DBCadd

F:\3083\3083-PS_PLANT EXPANSION SITES_FIG 3-11.dwg, FIG 3-11, 2/28/2013 3:04:06 PM, DBCadd

Cashin Associates, P.C.
db
A Joint Venture

TOWN OF BROOKHAVEN
NORTH BELLPORT SEWER FEASIBILITY STUDY

POTENTIAL PLANT EXPANSION PARCELS

SCALE: N.T.S.

FIGURE 3-11

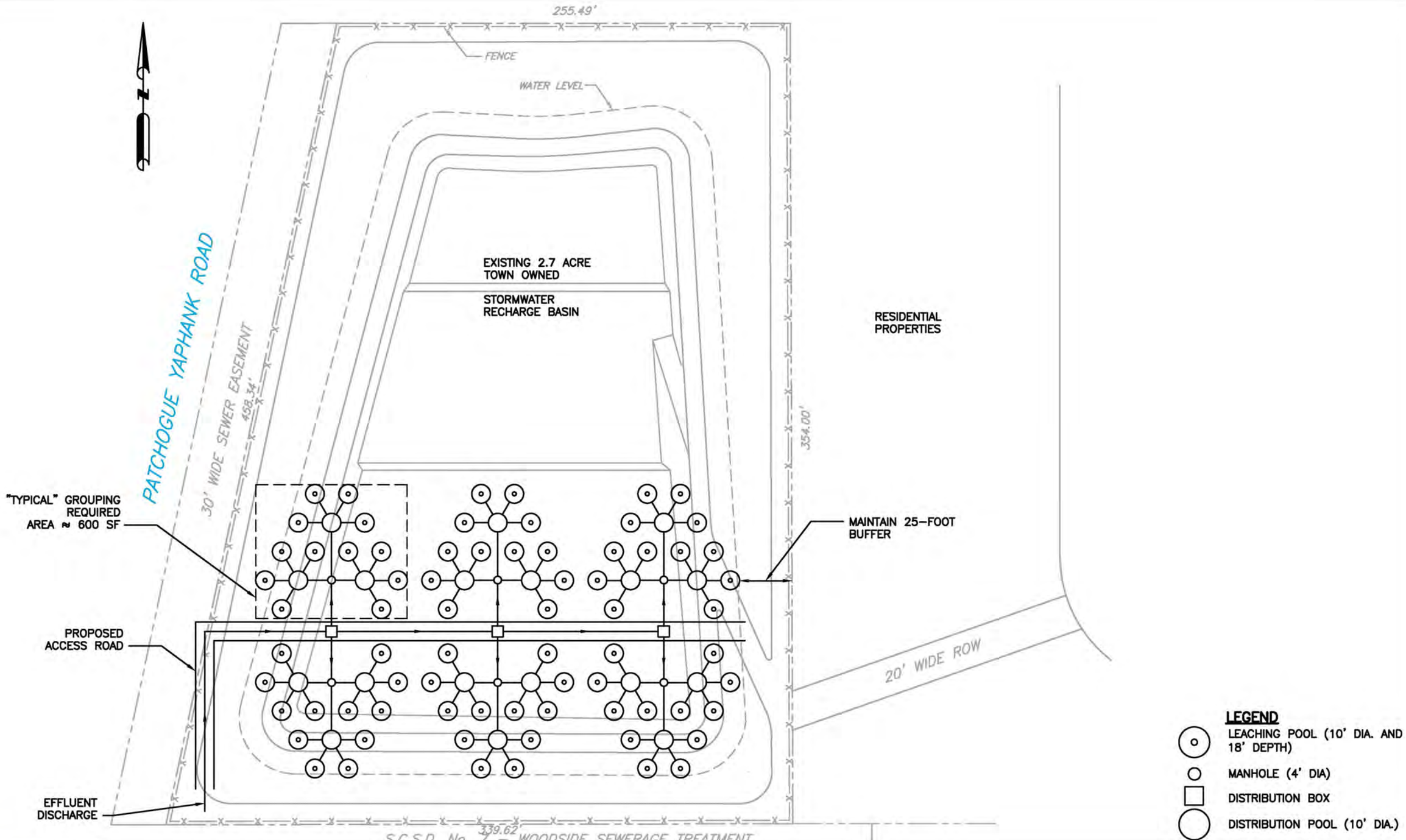

A Joint Venture

TOWN OF BROOKHAVEN
NORTH BELLPORT SEWER FEASIBILITY STUDY

SCALE:1"=50'±

PROPOSED LEACHING POOL LAYOUT PLAN

FIGURE 3-12

F:\3083\3083-SITE PLAN_FIG 3-12.dwg, FIG 3-12, 2/28/2013 3:10:10 PM, DBCadd

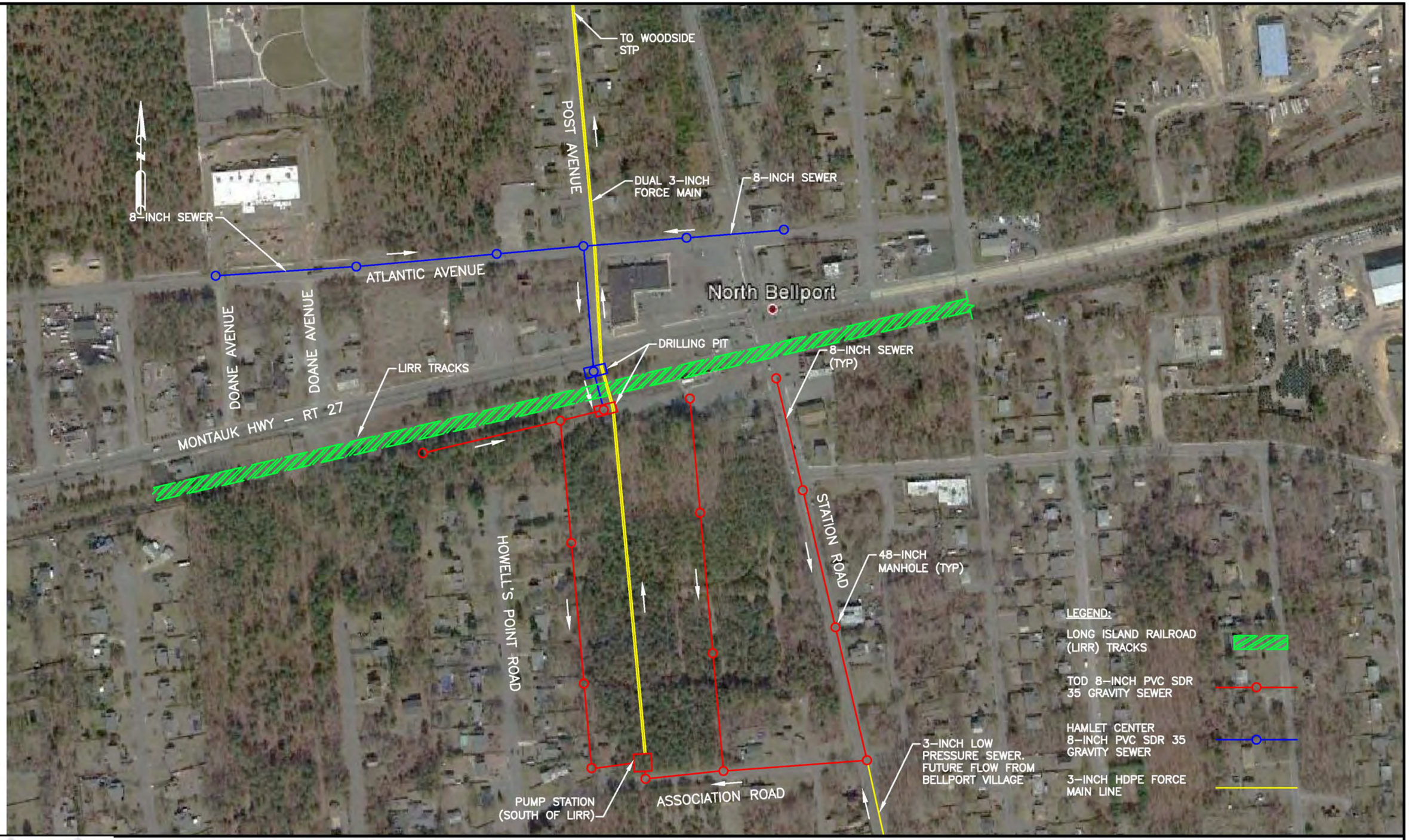

Cashin Associates, P.C.
db
A Joint Venture

TOWN OF BROOKHAVEN
NORTH BELLPORT SEWER FEASIBILITY STUDY

SCALE: N.T.S.

PUMP STATION AND SEWER SYSTEM LAYOUT -SOUTH OF LIRR TRACKS OPTION

FIGURE 3-13

A Joint Venture

TOWN OF BROOKHAVEN
NORTH BELLPORT SEWER FEASIBILITY STUDY

SCALE: N.T.S.

PUMP STATION AND SEWER SYSTEM -NORTH OF LIRR TRACKS OPTION

FIGURE 3-14

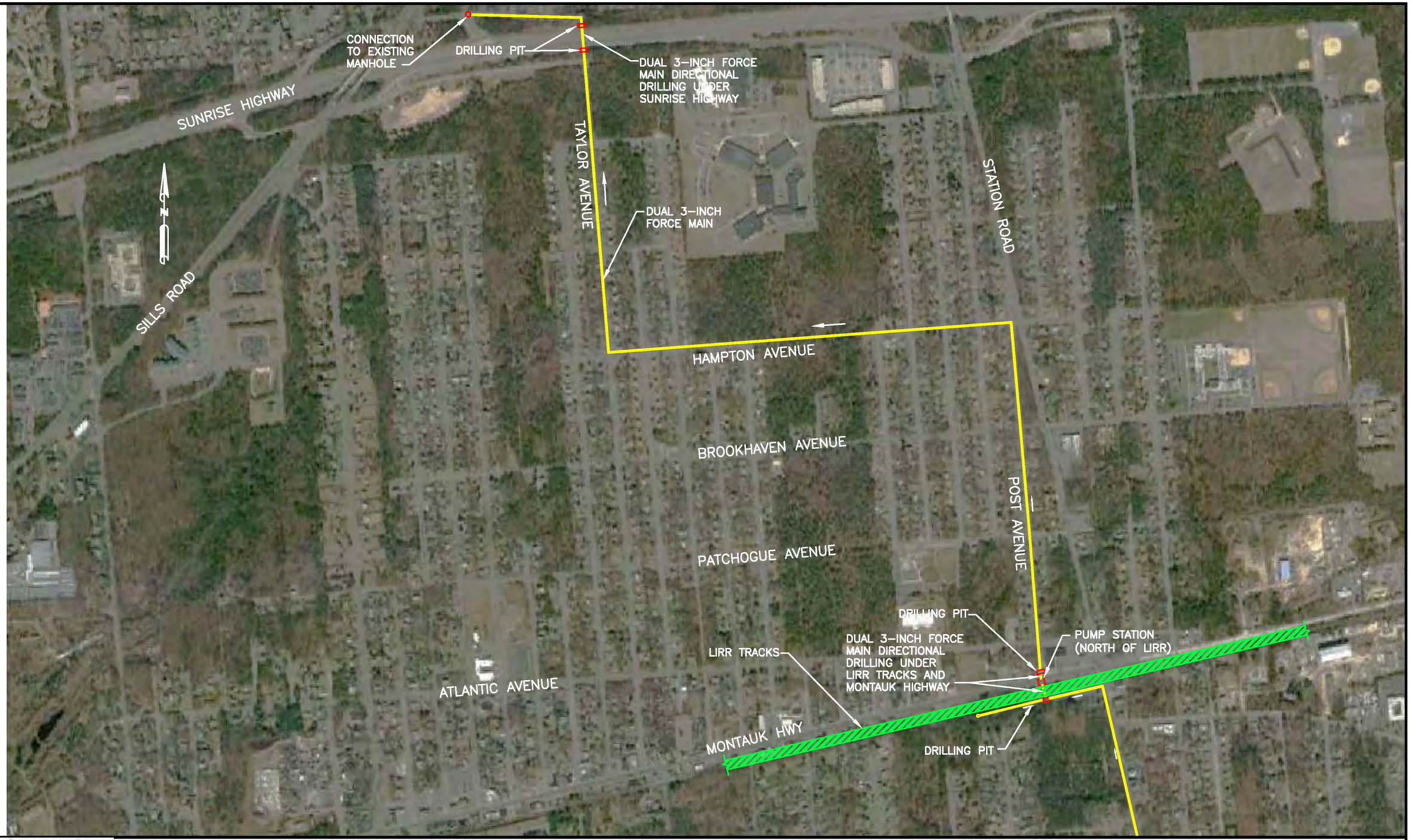

Cashin Associates, P.C.
db
A Joint Venture

TOWN OF BROOKHAVEN
NORTH BELLPORT SEWER FEASIBILITY STUDY

SCALE: N.T.S.

PUMP STATION AND SEWER SYSTEM LAYOUT - PROPOSED DUAL 3-INCH FORCE MAIN ROUTE

FIGURE 3-15

SITE No. 5
WOODSIDE/FARBER/DPW
EXISTING PLANT

SITE No. 2
N/S ATLANTIC AVE
W/S MICHIGAN AVE

SITE No. 1
BELLHAVEN NURSING
CENTER
STP BEAVER DAM ROAD

SITE No. 4
NORTHERN TERMINUS OF
DOANE AVE & S/S LIRR ROW

SITE No. 3
W/O STATION ROAD &
S/S ASSOCIATION ROAD

Cashin Associates, P.C.
db
A Joint Venture

N

0 1,000 Feet

FIGURE 3-16
TOWN OF BROOKHAVEN
NORTH BELLPORT
SEWER FEASIBILITY STUDY
CONTOURS

Greater Bellport
STP Siting Options Feasibility Study

Appendix No.1: SCDHS Requirements and Standards

Excerpts From:

- *Standards for Approval of Plans and Construction for Sewage Disposal Systems for Other than Single-Family Residences* – Includes standards for wastewater generation rates and leaching pool and sewer system requirements.

- Appendix A – of the above document, *Standards for Construction of Modified Subsurface Sewage Disposal Systems and Small Community Sewerage Systems* – Includes separation and setback distances required at STPs

- Appendix C - of the above document, *Requirements of Department of Health Services and Responsibilities of Licensed Design Professional in Inspecting Sewage Treatment Works or Collection Systems* – Includes details for leaching pools system design and layouts.

COUNTY OF SUFFOLK

STEVEN BELLONE
SUFFOLK COUNTY EXECUTIVE

SUFFOLK COUNTY
DEPARTMENT OF HEALTH SERVICES
DIVISION OF ENVIRONMENTAL QUALITY

STANDARDS FOR APPROVAL OF PLANS AND CONSTRUCTION FOR SEWAGE DISPOSAL SYSTEMS FOR OTHER THAN SINGLE-FAMILY RESIDENCES

Originally Issued on July 15, 2008

James L. Tomarken, MD, MPH, MBA, MSW
Commissioner of Health Services

Walter Dawydiak, PE, JD
Acting Director of Environmental Quality

2. Excavation Inspection Required

In the case of unacceptable soil and/or groundwater conditions, inspection of the excavation by a representative of the Department is required prior to the installation of the leaching pool(s).

3. Separate Certification of Construction May be Required

In certain instances, the Department may also require a separate certification of construction by a Design Professional for various aspects of the project as noted in the Permit Conditions issued at the time of approval.

VI. FINAL APPROVAL OF CONSTRUCTED WORKS REQUIRED

1. Final Approval of Constructed Works Required

Final approval of constructed works is necessary to operate or discharge into constructed sewage disposal systems, sewer systems, or treatment works. In addition, occupancy of a building(s) is prohibited without the issuance of final approval by the Department.

2. As-Built Plans Required

Final approval of constructed works will be granted to the applicant on as-built plans which are to be submitted after the final satisfactory field inspection is completed. Plans are to be signed and sealed by a licensed professional engineer or architect except a licensed surveyor may sign for conventional subsurface sewage disposal systems only. Refer to **Instructions for Obtaining Final Health Approval of Constructed Projects for Other than Single-Family Residences – Form WWM-019** for the as-built plan requirements.

3. Other Requirements

For further information, refer to **Instructions for Obtaining Final Health Department Approval of Constructed Projects for Other Than Single-Family Residences – Form WWM-019** and **Appendix C** of these standards.

VII. DETERMINING POPULATION DENSITY EQUIVALENT

A population density equivalent estimate must be made in order to determine the type of sewage disposal system required for a project, and to determine if a project meets the density requirements of Article 6 of the Suffolk County Sanitary Code. There are two alternative acceptable methods for determining population density equivalent, a **Calculation Method**, or a **Yield Map Method.**

1. Calculation Method

a) Commercial Projects

Population density equivalent is calculated by multiplying the adjusted gross lot area in acres (43,560 sq.ft./acre) by 600 gallons per day/acre (300 gallons per day per acre in Groundwater Management Zones III, V, or VI, or where a community water supply is not being provided). Adjusted gross lot area is obtained by subtracting the area of regulated freshwater wetlands, tidal wetlands, ponds, or other underwater lands from the land area as delineated and shown on official surveys and site plans.

b) Multiple Residential Projects

The population Density Equivalent is calculated as seventy-five percent (75%) of adjusted gross land area in square feet (sq. ft.), multiplied by 600 gallons /day / 40,000 sq. ft. of land area (300 gallons / day / 40,000 sq. ft. of land area in Groundwater Management Zones III, V, or VI, or when a community water supply is not being provided). The resultant value is the population density equivalent expressed as gallons / day.

Adjusted gross lot area is obtained by subtracting the area of regulated freshwater wetlands, tidal wetlands, ponds, or other underwater lands from the land area as delineated and shown on official surveys and site plans.

2. Yield Map Method

The Yield Map Method may be used as an alternative method for calculating population density equivalent. A map illustrating the location of building lots together with roads, recharge basins, and other appurtenances as would normally be necessary to develop single family lots on the site, shall be submitted for a lot yield determination by the Department. All lot areas and dimensions must be shown together with recharge basin calculations. Lot configurations should conform to local Town/Village zoning requirements for similar sized lots, and minimum zoning requirements should be specified on the maps. Yield maps shall be signed and sealed by the licensed design professional.

Regulated freshwater wetlands, tidal wetlands, ponds, or other underwater lands may be shown as part of the lots on a yield map. However, an applicant must demonstrate that all lots shown on the yield map will conform to the requirements of the Department with respect to the location of individual sanitary systems and water supply on these delineated lot areas or by the appropriate agencies having jurisdiction.

All lots shown on a yield map must be at least 20,000 sq.ft. in area (40,000 sq.ft. in Groundwater Management Zones III, V, or VI, or where a community water supply is not being provided).

The population density equivalent, in gallons / day, is obtained by multiplying the number of building lots by 300 gallons / lot / day.

VIII. DETERMINING DENSITY LOAD

Density Load is the sum of all density loads generated on a site. Density Load is derived from occupancy ratings and/or from density loading rates shown in Table 1 below. For mixed type buildings such as office/warehouse an appropriate density loading rate should be used to calculate the proportionate density load for each building use as applicable. The (total) Density Load is the sum of the proportionate density loads for all existing and proposed uses on the site. The density load does not include the kitchen/gray load from the site.

IX. DETERMINING DESIGN SEWAGE FLOW

The Design Sewage Flow for a project is derived from the hydraulic load rates shown in Table 1 below. For a mixed type building(s) such as office/warehouse, the design sewage flow rate should be calculated as the sum of all hydraulic loads for each individual use within the building(s). The Design Sewage Flow may be apportioned appropriately if more than one sewage disposal system is being proposed or modified.

TABLE 1 - PROJECT DENSITY LOADING RATES & DESIGN SEWAGE FLOW RATES

(Based upon gross floor area in square feet (sf) unless otherwise noted)

Structure Use	Density Load	Kitchen/Gray Load	Hydraulic Load
FOOD SERVICE			
Bar (in restaurant)	10 gpd/seat	5 gpd/seat	15 gpd/seat
Bar, Tavern, Disco (no fixed seating)	10 gpd/occupant[1]	5 gpd/occupant[1]	15 gpd/occupant[1]
Bar (outdoor/seasonal)	5 gpd/seat	2.5 gpd/seat	7.5 gpd/seat
Cafeteria (open to public)	See Primary use + 5 gpd/seat	2.5 gpd/seat	Primary use + 7.5 gpd/seat
Cafeteria/Continental Breakfast (not open to public)	See Primary Use	2.5 gpd/seat	Primary use + 2.5 gpd/seat
Snack Bar	See Primary Use	0.12 gpd/sf	Primary use + 0.12 gpd/sf
Juice Bar	See Primary Use	2.5 gpd/seat	Primary use + 2.5 gpd/seat
Catering Hall	5 gpd/seat	2.5 gpd/seat	7.5 gpd/seat
Outside Patio Dining	5 gpd/seat	10 gpd/seat	15 gpd/seat
Restaurant (full service or single services > 16 seats[2])	10 gpd/seat	20 gpd/seat	30 gpd/seat
Wet store w/ food (Deli/take-out with max 16 seats single service[2])	0.03 gpd/sf	0.12 gpd/sf	0.15 gpd/sf
Convenience store/Market/Farm Stand	0.03 gpd/sf	0.02 gpd/sf	0.05 gpd/sf
Commercial Bakery	0.04 gpd/sf	0.02 gpd/sf	0.06 gpd/sf
Wine/Beer Tasting (in a winery/brewery only)	5 gpd/occ	2.5 gpd/occ	7.5 gpd/occ
GENERAL INDUSTRIAL			
General Industrial[3]	0.04 gpd/sf	Industrial process water[4]	0.04 gpd/sf
Greenhouse	0.03 gpd/sf	N/A	0.03 gpd/sf
MEDICAL			
Drug Rehabilitation	75 gpd/bed	See note [5]	75 gpd/bed
Mental Health Residence	75 gpd/bed	See note [5]	75 gpd/bed
Hospital	300 gpd/bed	See note [5]	300 gpd/bed
Nursing Home	150 gpd/bed	See note [5]	150 gpd/bed
Assisted Living	110 gpd/bed	See note [5]	110 gpd/bed
Medical office space	0.10 gpd/sf	N/A	0.10 gpd/sf
Dialysis Center	0.10 gpd/sf	Dialysis process water[4]	0.10 gpd/sf
Veterinary[6]	0.10 gpd/sf + 10 gpd/animal boarding	N/A	0.10 gpd/sf + 10 gpd/animal boarding

MUNICIPAL SERVICES			
Library, firehouse, precinct, museum, art gallery (w/ meeting rooms)	0.03 gpd/sf+ 5 gpd/occupant[1] for meeting rooms	2.5 gpd/occupant[1]	0.03 gpd/sf + 5 gpd/occupant[1] + 2.5 gpd/occupant[1]
Library, firehouse, precinct, museum, art gallery (w/o meeting rooms)	0.03 gpd/sf	2.5 gpd/occupant[1]	0.03 gpd/sf + 2.5 gpd/occupant[1]
OFFICE			
Non-medical office space	0.06 gpd/sf		0.06 gpd/sf
RECREATION			
Bath house/comfort station	5 gpd/occupant[1]	5 gpd/shower/occupant[1] + Food service[7]	5 gpd/occupant[1] + 5 gpd/shower/occupant + Food service[7]
Bowling alley/tennis court/racquetball	100 gpd/court or alley	Food service[7]	100 gpd/court or alley+ Food service[7]
Miniature golf	15 gpd/parking space	Food service[7]	15 gpd/parking space + Food service[7]
Ice/roller Skating Rink	15 gpd/skater[1] + 5 gpd/specator[1]	Food service[7]	15 gpd/skater[1] + 5 gpd/specator[1] + Food service[7]
Recreation	15 gpd/parking space	Food service[7]	15 gpd/parking space + Food service[7]
Spa/Fitness Center/ Karate/Dance/etc. (w/ showers & amenities)	0.1 gpd/sf	0.2 gpd/sf + Food service[7]	0.3 gpd/sf + Food service[7]
Spa/Fitness Center/ Karate/Dance/etc. (w/o showers & amenities)	0.1 gpd/sf	Food service[7]	0.1 gpd/sf + Food service[7]
Marina	10 gpd/boat slip	Food service[7]	10 gpd/boat slip + Food service[7]
OTB	5 gpd/person	Food service[7]	5 gpd/person + Food service[7]
Theater	3 gpd/seat	Food service[7]	3 gpd/seat + Food service[7]
Horse Farm[6]	0.04 gpd/sf + 10 gpd/stall		0.04 gpd/sf + 10 gpd/stall
Camp Ground	10 gpd/camper	5 gpd/shower/camper	10 gpd/camper + 5 gpd/shower/camper
Billiard Hall	5 gpd/occ	2.5 gpd/occ	7.5 gpd/occ
RESIDENTIAL			
Single Family Residence	300 gpd		300 gpd
Two Family Residence	600 gpd		600 gpd
Rooming house	75 gpd/bed		75 gpd/bed

Motel/Hotel unit up to 400 sq.ft. gross floor area w/o kitchenette (w/kitchenette see Housing Unit)	100 gpd/unit		100 gpd/unit
Motel/Hotel unit > 400 sq.ft. gross floor area w/o kitchenette (w/kitchenette see Housing Unit)	150 gpd/unit		150 gpd/unit
Housing Unit[8] up to 600 sq.ft. gross floor area	150 gpd/unit		150 gpd/unit
Housing Unit[8] between 601-1200 sq.ft. gross floor area	225 gpd/unit		225 gpd/unit
Housing Unit[8] > 1200 sq.ft. gross floor area	300 gpd/unit		300 gpd/unit
PRC unit up to 600 sq.ft. gross floor area	100 gpd/unit		100 gpd/unit
PRC unit between 600-1600 sq.ft. gross floor area	150 gpd/unit		150 gpd/unit
PRC unit between 1600-2000 sq.ft. gross floor area	225 gpd/unit		225 gpd/unit
PRC unit > 2000 sq.ft. gross floor area	300 gpd/unit		300 gpd/unit
RETAIL			
Dry store	0.03 gpd/sf		0.03 gpd/sf
Wet store w/o Food (Hair salon, nail salon, pet shop w/o animal boarding, etc.)	0.03 gpd/sf	0.07 gpd/sf	0.1 gpd/sf
Car Dealership	0.03 gpd/sf for showroom/offices + 0.04 gpd/sf for maintenance/storage areas		0.03 gpd/sf for showroom/offices + 0.04 gpd/sf for maintenance/storage areas
Massage/Tanning	0.03 gpd/sf		0.03 gpd/sf
Tattoo Parlor	0.03 gpd/sf		0.03 gpd/sf
SCHOOL			
Boarding school/ Dormitory	75 gpd/capita[1]	2.5 gpd/capita[1]	77.5 gpd/capita[1]
Day School	5 gpd/capita[1]	2.5 gpd/capita[1]	7.5 gpd/capita[1]
MISCELLANEOUS			
Car Wash	0.04 gpd/sf	Car wash process water[4]	0.04 gpd/sf
Laundromat	0.03 gpd/sf	Laundromat process water[4]	0.03 gpd/sf

Funeral Home	0.05 gpd/sf	Funeral Home process water[4]	0.05 gpd/sf
House of Worship (w/ meeting rooms)	1.5 gpd/seat + 5 gpd/occupant[1] for meeting rooms	2.5 gpd/occupant[1]	1.5 gpd/seat + 5 gpd/occupant[1] + 2.5 gpd/occupant[1]
House of Worship (w/o meeting rooms)	1.5 gpd/seat	2.5 gpd/occupant[1]	1.5 gpd/seat + 2.5 gpd/occupant[1]
Public Storage[9]	0.04 gpd/sf		0.04 gpd/sf
Animal boarding[6]	0.03 gpd/sf + 10 gpd/animal		0.03 gpd/sf + 10 gpd/animal
Winery/Brewery	0.04 gpd/sf	Winery/Brewery process water[4]	0.04 gpd/sf

1 Occupancy ratings can be determined using New York State Uniform Fire Prevention and Building Code as a guide.
2 Single Service means disposable plates, silverware & cups. Takeout seating is for waiting patrons and is not convertible to full seating or for density credit at full service restaurants.
3 General industrial buildings may contain up to 15% related office space without applying a proportionate office density loading or flow rating to the space. If office space exceeds 15% of gross floor area, then a proportionate office density loading or flow rating must be applied to the entire office space.
4 Process waters require a separate permit and disposal facilities – Consult Department.
5 A grease trap shall be provided for this installation which is sized at 20 gpd/bed.
6 A separate sewage disposal system shall be provided for wastewater generated from animal boarding, horse stalls, or kennel areas.
7 Food (kitchen) flow is added according to the type of food service in the establishment.
8 Motel/Hotel with Kitchenettes, Cottages, Apartments, Condominiums, Mobile Homes, Trailers, or Co-Ops.
9 Public storage density and/or design flow may be reduced if restrictive covenants are recorded on the parcel.

Note: **The above table is subject to amendment from time to time as data becomes available to the Department. The table will be republished as an addendum to these standards if and when revised.**

XVI. LEACHING POOL REQUIREMENTS

1. General

Leaching pools are used as part of conventional subsurface or alternative sewage disposal system, and on-site and community sewage treatment systems to infiltrate effluent into the surrounding soil.

2. Location

Leaching pools must be installed in areas that are easily accessible for routine inspection, maintenance, replacement or expansion. Refer to Section XI for additional requirements concerning the locationof leaching pools.

3. Design Leaching Area

a) Leaching pool systems shall be designed on the basis of sidewall area to receive one full day's hydraulic design flow. The required sidewall leaching area is computed from the outside wall area below the inlet pipe for satellite pools and below the outlet pipe for distribution pools. The pool bottom area is not to be included in the leaching area computation.

b) The minimum required system sidewall leaching area is 300 sq.ft.

c) The maximum hydraulic leaching rate of 1.5 gal/sq.ft./day shall be used for Conventional Subsurface Sewage Disposal Systems.

d) The maximum hydraulic leaching rate of 5 gal/sq.ft./day shall be used for On-Site and Community Sewage Treatment Systems without positive filtration processes.

e) The maximum hydraulic leaching rate of 10 gal/sq.ft./day shall be used for On-Site and Community Sewage Treatment Systems with positive filtration processes.

f) The maximum hydraulic leaching rate for alternative sewage disposal systems shall be determined in accordance with the requirements of Section XXV of these standards.

4. Leaching Pool Design and Construction Details (Figure #7)

a) All leaching pools shall have an outside diameter of eight feet or ten feet.

b) When more than one leaching pool is used, all pools shall be the same size and depth, except the distribution pool, which may differ.

c) When a distribution pool is used, all outlet pipes shall be set at the same elevation and be at least three inches below the inlet pipe. All outlets shall be provided with an 18 inch drop tee.

d) The maximum permissible depth of a precast concrete leaching pool is twenty five feet from finished grade. The minimum permissible effective depth of any leaching pool shall be three feet.

e) The minimum vertical separation distance from the bottom of the leaching pools to the highest recorded groundwater elevation shall be 3 feet for all new leaching pools installed after the effective date of this standard. Previously installed leaching pools that do not meet this criteria may be accepted by the Department on a case-by-case basis.

f) All leaching pools (i.e. slabs, domes, covers, etc.) shall be constructed of precast reinforced concrete and designed to be traffic bearing to meet the requirements of AASHTO H-20 loading.

g) All leaching pools shall be provided with one opening with a minimum diameter of 20 inches. A watertight and insect-proof adjustable and locking cast iron frame and cover shall be installed at grade over each opening.

h) Extension Collars (chimneys) may be used for the purpose of bringing the cast iron covers to grade provided that they are firmly affixed in place. The extension collar (chimney) shall be of reinforced precast concrete at least 24 inches in diameter and shall not exceed 2 feet in height.

i) The top slab or dome of the leaching pool shall be located a maximum of 2.5 feet below grade.

j) All sewer pipes shall penetrate the vertical sidewall of the leaching pool and shall be sealed with grout. There shall be no penetrations within domes.

5. Leaching Pool Arrangement / Layout (Figure #8)

a) A maximum of 3 leaching pools are permitted to be piped directly from the septic tank.

b) When 4 or more leaching pools are required, a distribution leaching pool or a distribution manhole shall be used to apportion the flow to the satellite leaching pools.

c) A maximum of 4 satellite leaching pools shall be piped from a distribution pool or manhole to form one leaching pool cluster.

d) When more than 5 leaching pools are required, multiple leaching pool clusters shall be provided. The leaching pool clusters may be piped directly from the septic tank or from distribution pools or manholes as required.

e) When multiple clusters are utilized, each cluster shall be equipped with a gate or ball valve to allow for isolation and resting. Each valve shall be outfitted with a traffic bearing cover that is accessible for operation from grade.

6. Installation Requirements

   a) Leaching pools shall be installed in clean sand (defined as SP or SW by ASTM standards).

   b) Unsuitable soils shall be removed and replaced with clean sand for a diameter six feet greater than the leaching pool (three foot collar) extending down until a hydraulic connection is established with a minimum six foot stratum of acceptable material.

   c) In cases where clean sand cannot be encountered, a design for an alternative sewage disposal system may be required in accordance with Section XXV of these standards.

   d) The bottom and sidewall area of the leaching pools shall be free of debris before backfilling.

XVII. MANHOLE REQUIREMENTS

1. General

   Manholes are used as part of a sewage disposal and collection systems to distribute equal volumes of sewage, to allow for access, or to collect and re-distribute sewage.

2. Location

   a) Manholes shall be provided on gravity sewer lines wherever there is a grade change or alignment change further than 10 feet from building foundations as measured along the pipe.

   b) Manholes shall be provided on gravity sewer lines at intervals not exceeding 400 feet.

   c) Manholes shall be provided at the junctions and at the ends of lateral or main sewer lines.

   d) Building sewer connections shall not be piped directly to a collection system manhole, but shall be connected to the main line via a wye connection.

3. Design and Construction Details

   a) All manholes (i.e. slabs, covers, etc.) shall be constructed of precast reinforced concrete and designed to be traffic bearing to meet the requirements of AASHTO H-20 loading.

   b) All manholes shall be constructed in accordance with ASTM C-478 (latest revision).

   c) All manholes shall be provided with an opening with a minimum diameter of 20 inches. A watertight and insect-proof adjustable and locking cast iron frame and cover shall be installed at grade over each opening.

d) Extension Collars (chimneys) may be used for the purpose of bringing the cast iron covers to grade provided that they are firmly affixed in place. The extension collar (chimney) shall be of reinforced precast concrete at least 24 inches in diameter and shall not exceed 2 feet in height.

e) The top slab of the manhole shall be located a maximum of 2.5 feet below grade.

f) The base section of all manholes (bottom slab and minimum of 1 foot of sidewall) shall be monolithically cast.

g) Precast concrete sections shall be sealed with one(1) - inch butyl rubber joint sealant which conforms to ASTM C-990.

h) The bottom of all manholes shall be coved or benched. The bench shall be the same width as the diameter of the pipe and shall extend upward at least three-quarters of the diameter of the pipe.

i) All sewer pipe penetrating the manhole shall be accomplished with a cast- in place flexible rubber sleeve that conforms to ASTM C-923 and stainless steel tightening devices. For cases where a new penetration is being made into an existing manhole, a link seal may be substituted for the rubber boot.

j) If the manhole is more than four feet in depth, manhole steps shall be provided every twelve (12) inches. The steps shall be constructed of copolymer polypropylene coated 2 inch steel reinforcing bar. The access opening shall be provided over the manhole steps.

k) Whenever practical, manholes shall not be located in groundwater. For installations that are placed in groundwater, the bottom and side portion, up to 18 inches above the highest recorded groundwater elevation, of the manhole shall be monolithically constructed. In cases where this is not practicable, the manhole shall be water-proofed up to 18 inches above the highest recorded groundwater elevation and leak tested to ensure tightness prior to operation. Maximum permissible leak rate is ¼ inch in 8 hours.

4. Types of Manholes

Manholes can be broken into 4 general categories. In addition to the items in Section C above, each category shall conform to the following requirements:

a) Access/Junction Manhole (Figure #9)

i. Access/junction manholes shall have a minimum inside diameter of 4 feet.

ii. For pipe diameters of 24 inches or greater, the minimum inside diameter of the manhole shall be 5 feet.

iii. A minimum drop of 0.1 foot shall be provided between the inlet and lowest outlet invert elevation.

iv. The maximum change in elevation between the inlet and outlet invert shall be no greater than 2 feet.

b) Drop Manhole (Figure #10)

i. All drop manholes shall have a minimum inside diameter of 5 feet

ii. A drop manhole is required to be provided when the difference in elevation between the inflow and outflow sewer line is greater than 2 feet.

iii. The drop pipe shall be securely attached to the sidewall of the manhole with stainless steel straps.

c) Distribution Manhole (Figure #11)

i. All outlets from the distribution manhole shall be set at the same elevation.

ii. A minimum drop of 0.1 foot shall be provided between the inlet and outlet invert elevations.

d) Sampling Manhole (Figure #12)

i. Dimensions for sampling manholes shall be 2 foot by 2 foot.

ii. Maximum depth for sampling manhole shall be 4 feet.

iii. A minimum drop of 0.1 foot shall be provided between the inlet and outlet invert elevations.

iv. A 12 inch deep sample retention area shall be provided below the outlet invert elevation.

XVIII. GRAVITY SEWER LINE REQUIREMENTS

1. General Sewer Line Requirements

a) Gravity sewer lines and fittings shall meet or exceed ASTM standard D-3034 for PVC sewer pipe with a minimum SDR 35 rating, unless otherwise indicated.

b) PVC pipe and fittings shall be provided with integral bells and spigots and rubber sealing rings. The sealing rings shall meet the requirements of ASTM standard F-477. All sewer lines shall be straight, and couplings shall be securely installed and be watertight.

c) All sewer lines shall have a minimum diameter of four (4) inches.

d) Where practical, gravity sewer lines shall not be installed in groundwater. For installations that are placed in groundwater, the sewer piping shall be constructed of pressure rated piping and tested to ensure tightness prior to operation. Maximum permissible leak rate is ¼ inch in 8 hours.

2. Internal Building Plumbing

a) Internal building plumbing shall be designed in accordance with applicable building codes and is outside the jurisdiction of the Department.

b) It is the preference of the Department that all individually owned buildings, residences, or premises be plumbed separately and serviced with an independent house connection to the exterior sanitary services.

c) The use of common house connections shall be permitted provided that the internal plumbing is designed to accommodate multiple sewer connections in accordance with good engineering practice and applicable building codes. In addition, restrictive covenants shall be placed upon the property notifying the owner and/or homeowners association of their responsibility for the operation and maintenance of the internal sewer appurtenances; including, but not limited to, the repair, replacement, and cleaning of the internal piping within the structure.

3. House Connections

a) A house connection is defined as the portion of the gravity sewer line which extends from the face of the building to the sewage disposal or sewer system.

b) There shall be a minimum two foot length of cast-iron sewer line extending through the foundation.

c) House connections shall have a minimum diameter of 4 inches, unless otherwise noted.

d) House connections serving two or more commercial or multiple residential units shall have a minimum diameter of 6 inches.

e) House connections shall have a minimum pitch of one-quarter inch per foot.

f) Slip ring connectors of the proper type shall be used at the cast iron joint. If required, a flexible PVC coupling with stainless steel bands may be used to connect cast iron pipe to PVC house Connections. The flexible coupling and bands shall conform to ASTM C1173.

g) All house connections shall be provided with a clean-out at the face of the building.

h) House connections shall be straight. There shall be no bends in sewer lines to the septic tank or grease trap. If bends are unavoidable, then the following additional criteria shall apply:

i. For bends greater than 10 feet from the building foundation as measured along the length of the sewer pipe, an approved manhole will be required where the pipe changes direction.

ii. For bends within 10 feet of the building foundation measured along the length of the sewer pipe, no fittings greater than 45 degrees shall be installed. If a directional change greater than 45 degrees is required, a minimum of five foot length of pipe shall be installed between fittings. The maximum permitted change in alignment of the sewer line shall be 90 degrees as measured along the axis of the starting pipe.

iii. Cleanouts are required at any bend within 10 feet from the building or every 75 feet along the length the house connection. Refer to Figure #13.

4. Sewer Main / Lateral Sewer Requirements

a) Sewer main and lateral sewers shall have a uniform slope and be laid with a straight alignment, without bends. When required, approved manholes may be utilized where sewers change direction or slope.

b) House or building sewers shall be connected to main or lateral sewers with approved wye fittings.

c) Sewers shall be provided with manholes at intervals not to exceed 400 feet. See Section XVII for manhole location requirements.

d) Sewer main and lateral sewers shall have a minimum diameter of eight inches, and shall have a minimum slope of 0.4%. Ten inch diameter sewers shall have a minimum slope of 0.28%.

e) Sewer main and lateral sewers that have less than 2 foot of cover or are not placed on virgin soil shall be constructed of ductile iron pipe.

f) Sewer main and lateral sewers that have between 2 foot and 4 foot of cover shall be constructed of DR18 or ductile iron pipe.

g) Sewer main and lateral sewers that have over 4 foot of cover may utilize SDR35 pipe.

5. Installation / Backfilling Requirements

a) The width of trenches shall be adequate to allow sewer pipe to be laid and joined properly and to allow bedding and haunching to be placed and compacted to adequately support the pipe.

b) The embedment material around the PVC pipe shall be installed in layers not exceeding six inches. The embedment material shall be Class I, Class II, or Class III. Class I material shall conform to the following standards: minimum particle size 3/4 inches, not less than 50% weight of material shall pass the 3/8 inch sieve. Class II material is defined as coarse sands and gravels with maximum particle size of 40 mm (1/2 inches), including variously graded sands and gravels containing small percentages of fines, generally granular and non-cohesive, either wet or dry. Unified Soil Classification types GW, CP, SW, SP are included in this Class. Class III material is defined as fine sand and clayey gravels, including fine sands, sand clay mixtures, and gravel - clay mixtures. All backfill material within one foot horizontally and one foot above the crown of the pipe shall be placed by hand and requires hand compaction.

c) Each layer of Class II and class III material shall be compacted to a minimum density of ninety-five (95) percent of maximum density of the soil as determined by the Standard Procter Test AASHTO designation T-99.

d) For additional requirements concerning the installation of PVC sewer pipe, refer to ASTM standard D-2321 "Underground Installation of Thermoplastic Pipe for Sewers and Other Gravity- Flow Applications".

6. Testing

Deflection testing of every section of sewer main or lateral sewers, constructed of PVC, is required by the Department. The total vertical wall deflection of the PVC pipe, as determined by testing not earlier than 30 days after placement and compaction of the final backfill, shall not exceed four (4) percent of the inside pipe diameter. The deflection shall be checked by manually pulling a "GO - NO GO" deflection testing mandrell through the pipe. The contractor shall conduct the tests under the observation of the certifying engineer / architect.

7. Certification

For projects that involve a sewage collection system, a licensed engineer / architect shall certify that all material, method of construction, installation, and testing of the sewer pipe meet the requirements of these standards as well as plans approved by the Department. Refer to **Appendix C** of these standards.

XIX. SEPARATION OF SEWER AND WATER LINES

1. Parallel Installation

a) Sewers shall be laid at least 10 feet horizontally from any existing or proposed water main or lateral. The distance shall be measured edge to edge.

b) If it is not practical to maintain a horizontal separation of ten feet, the department may allow a deviation on a case-by-case basis. Such deviation may allow for the installation of the sewer to

be a minimum of 5 feet to a water main or lateral, provided that the bottom of water main or lateral is at least 18 inches above the top of the sewer line.

c) If the vertical separation as described in item 2 above cannot be obtained, the department may allow a deviation on a case-by-case basis. Such deviation may allow for the installation of the sewer to be a minimum of 5 feet to a water main or lateral, provided that the bottom of the water main or lateral is at least 12 inches above the top of the sewer line and both are constructed of pressure rated pipe.

2. Crossings

a) The crossing of water and sewer lines should be avoided unless proven absolutely necessary.

b) Water Line over Sewer Line

In the event that the water line must cross over the sewer line, the following conditions shall be met:

i. sewer lines shall be laid below the water line and provide a separation of at least 18 inches between the bottom of the water line and the top of the sewer line; and

ii. sewer line joints shall be at least 10 feet from the point of crossing; and

iii. when it is not practical to obtain an 18 inch separation, both the water and sewer lines shall be constructed of pressure pipe and have a minimum separation of 12 inches between the bottom of the water line and the top of the sewer line.

c) Sewer Line over Water Line

In the event that the sewer line must cross over the water line, the following conditions shall be met:

i. adequate structural support shall be provided for the sewer to maintain line and grade; and

ii. water line and sewer line joints shall be at least ten feet from the point of crossing; and

iii. the entire length of sewer line between adjacent manholes or other sanitary structures shall be constructed of materials and joints that are equivalent to water main standards of construction; and

iv. a vertical separation of at least 18 inches shall be provided between the bottom of the sewer line and the top of the water line. In the event that this distance cannot be maintained, the department may allow a deviation on a case-by-case basis. In no case shall the separation distance be less than 12 inches between the bottom of the sewer line and the top of the water line.

XX. SEPARATION OF SEWER AND DRAINAGE LINES

1. Sewers shall be laid at least 5 feet horizontally from any existing or proposed drainage line. The distance shall be measured edge to edge.

2. In the event that the drainage line must cross over the sewer line, the sewer line must be constructed of ductile iron pipe unless a separation distance of 18 or more inches is maintained.

3. In the event that the sewer line must cross over the drainage line, the sewer line shall be constructed of ductile iron pipe for a distance of 3 feet horizontally into virgin soil.

4. If perimeter roof drainage piping is installed near the face of the building, all house connections must be constructed of ductile iron pipe for 10 feet from the building.

XXI. BACKFILL AND FINAL GRADING

1. Backfill and Final Grading

   The completed system shall be backfilled and covered with suitable soil following permission to do so by the Department. The property shall be graded to minimize surface drainage into the system. A maximum 5 percent slope downward shall be maintained for 20 feet horizontally from the nearest edge of the leaching portion of the pool(s) to the toe of the slope before tapering off to prevent seepage of the leachate through the slope. Dummy rings that are utilized to bring the system to grade shall be permitted to be placed at a lesser horizontal distance. Steep grades further than twenty feet from the leaching pools shall be stabilized pursuant to local codes.

2. Retaining Walls

   a) In cases where the grading and slopes indicated in paragraph A. above, the utilization of retaining walls shall be required. In such cases, the retaining walls shall be designed by a licensed design professional in accordance with good engineering practice and applicable building codes. All retaining walls shall be shown as part of a grading and plot plan.

   b) Retaining walls shall be constructed to met the following requirements:

      i. Retaining walls that are located within 20 feet of the sewage disposal system shall be constructed of reinforced concrete.

      ii. No part of the sewage disposal system shall be placed closer than 10 feet from a retaining wall.

iii. If the leaching pools are located closer than 20 feet from the retaining wall, waterproofing will be required to prevent the seepage of leachate through the wall.

XXII. SEWAGE PUMP STATIONS

1. General Requirements

Sewage disposal systems should be designed to flow by gravity. Only when absolutely necessary should pump stations be used. In such cases, the sewage pump station plans shall be prepared by a licensed design professional and must be reviewed and approved by the Department. In addition, construction and installation of sewage pump stations must be certified by a licensed professional engineer. For additional information concerning sewage pump stations refer to **GLUMRB - Recommended Standards for Wastewater Facilities -2004 edition (or latest revision)** and **NYSDEC - Design Standards for Wastewater Treatment Works - 1988 edition (or latest revision).**

2. Location

a) Sewage pump stations and valve chambers must be located in an area that is easily accessible for proper operation and routine maintenance. Security fencing shall be provided around pump station installations. Refer to Section XI for additional requirements concerning the location of sewage pump stations.

b) Whenever practical, pumping stations that are utilized as lift stations within conventional on-site sewage disposal systems shall be located after the septic tank. In no instance shall the pump station be located prior to the grease trap.

c) Whenever practical, pump stations shall not be located in groundwater.

3. Design / Construction Requirements

a) All sewage pump station components are to be constructed of precast reinforced concrete and designed to be traffic bearing that meets the requirements of AASHTO H-20. Concrete pumping stations shall have a minimum inside diameter of four (4) feet. Pump stations may be constructed of other materials provided that they are water-tight, non-corrodible, and structurally sound.

b) The bottom and side portion, up to 18 inches above the inlet invert, of the station shall be monolithically constructed. In cases where this is not practicable, the pumping station shall be water-proofed up to 18 inches above the invert and leaked tested to ensure tightness prior to operation. Maximum permissible leak rate is ¼ inch in 8 hours.

c) Inlet sewer pipes penetrating the sidewall of the pump station shall be provided with cast-in-place rubber sleeves with stainless steel tightening devices or with a flexible rubber sleeve that conforms to ASTM C-923.

d) Pump station wet well volume shall be sized to prevent excessive retention of sewage while preventing frequent cycling of pumps. Minimum cycle times between 15 and 30 minutes are recommended.

e) The floor of the wet well shall be sloped toward the pump units to prevent the deposition of sewage solids.

f) Precast concrete sections shall be sealed with one (1) - inch butyl rubber joint sealant which conforms to ASTM C-990.

g) The maximum permissible depth of a pump station from grade shall be 30 feet.

4. Mechanical Requirements

a) Duplex submersible sewage pumps that are automatically alternated shall be provided. A hand-off-automatic (HOA) switch shall also be provided for each pump. Each pump shall be capable of meeting the anticipated peak sewage design hydraulic flow rate.

b) In some cases, where the pump station is receiving raw sewage, grinder type sewage pumps may be required.

c) Pumps shall be readily removable and replaceable without dewatering the wet well or disconnecting any piping in the wet well. Stainless steel guide rails together with slide away flanges, or quick disconnect couplings shall be provided for this purpose.

d) Pump discharge piping within the pumps station shall be constructed of ductile iron or stainless steel piping.

e) Pump stations shall have adequate ventilation, by providing an intake fan that forces fresh air into the bottom of the lift station. The intake fan shall be capable of providing 12 air changes per hour for continuous operation or 30 air changes per hour for intermittent operation. An exhaust vent shall also be provided to remove sewer gases. Odor control equipment may be required for the exhaust vent.

f) A hinged and lockable (non-skid) aluminum or stainless steel door shall be provided to allow accessibility to the pumps.

g) A non-corrodible ladder with safety climb device shall be provided for access to the pumping station.

h) A hinged and lockable (non-skid) aluminum or stainless steel door shall be provided to allow access to the ladder.

i) Each pump shall be equipped with a stainless steel chain or cable. In addition, a pump lifting device shall be provided on-site to facilitate the removal of the pumps.

j) There shall be no physical interconnection between any potable water supply and a sewage pumping station or any of its components.

5. Electrical Requirements

   a) All electrical components, including pumps, fans, and wiring, shall be explosion proof and conform to the requirements for Class I, Division 1, Group D of the National Electrical Code.

   b) There shall be no electrical splices, junction boxes, or connections of any kind in the sewage wet well. Junction boxes shall be located within a NEMA 4X enclosure outside of the pump station wet well.

   c) The pump station shall be provided with a minimum of 5 pump control switches. These include: a) "Low Level Alarm", b) "Pumps Off", c) "Lead Pump On", d) "Lag Pump On", e) "High Water Alarm". Encapsulated mercury filled float switches shall be used for this purpose. A hand-off-automatic (HOA) switch shall also be provided.

   d) Pump stations shall be provided with a dialer alarm that is activated by the low level and high level alarms.

   e) Alternative pump control devices, such as, a mutlitrode or bubbler system may be accepted in lieu of float controls. If an alternative device is utilized, a redundant high level float and low level float must be provided. The high level alarm shall activate the dialer alarm and operate the pumps throughout the throw of the float. The low level alarm shall activate the dialer alarm.

   f) Pump station control panels should be located within a building or other enclosure when possible. If required, control panels may be located outside of buildings, provided that the controls are located within a NEMA 4X rated enclosure that is placed within another NEMA 3R box.

   g) If pump control panel(s) are not within line of sight of the pumping station, then the pumps shall be outfitted with local disconnect switches at the pump station in lieu of a junction box.

   h) When pump stations are serving Multiple Residential Type projects, a permanent emergency power generator set with an automatic transfer switch shall be provided at the site. For other types of projects, consult the Department. All equipment and installation shall conform to the requirements of the National Electrical Code.

   i) A permanent light fixture shall be provided in the pump station wet well.

6. Valve Chamber

   a) The valve chamber shall be constructed of precast reinforced concrete and designed to be traffic bearing that meets the requirements of AASHTO H-20.

   b) Each pump shall be provided with a check and shut-off or isolation valve located within a separate chamber, outside of the pump station.

c) The piping within the valve vault shall be constructed of ductile iron or stainless steel piping.

d) A hinged and lockable aluminum or stainless steel door with a non-skid surface shall be provided over the valve chamber to allow accessibility to all valving.

e) If necessary, access steps, constructed of polypropylene coated 2 inch steel bar shall be provided to access all valving from finished grade.

f) A permanent light fixture shall be provided in the valve chamber.

7. Certification

For projects that involve a sewage pumping station, a licensed design professional shall certify that all materials, method of construction, installation, and testing of the sewer pipe and equipment meet the requirements of these standards as well as plans approved by the Department. Refer to **Appendix C** of these standards.

8. Exceptions

The Department may accept pump station designs which vary from the standards in cases of small sewage flows provided that the licensed design professional submits engineering justification acceptable to the Department.

XXIII. SEWAGE FORCE MAINS

1. Materials

Force mains may be constructed of either PVC and /or ductile iron in accordance with the following criteria:

a) Plastic (PVC) sewer pipe used for force mains that have a diameter less than 4 inches shall be constructed of schedule 40 or 80 PVC pipe and meet the requirements of ASTM standard D-1785. Fittings shall have bell push-on joints and rubber sealing rings constructed of ductile iron, grade 65-45-12, in accordance with ASTM standard A-536. The rubber sealing rings shall meet the requirements of ASTM standard F- 477.

b) Plastic (PVC) sewer pipe and fittings used for force mains that have a diameter of four (4) inches or greater shall have a minimum rating of SDR-18 and meet or exceed the requirements of the AWWA C-900 standard. Rubber sealing rings shall meet ASTM F-477.

c) Ductile iron pipe shall conform to AWWA C-150 and C-151 standards and have a minimum class 52 designation. Ductile iron push-on-joints used with this pipe shall conform to AWWA C-111; fittings shall meet AWWA C-110 and C-153 standards.

2. Design

a) Force mains shall be designed to provide a minimum flow velocity of 2 feet per second and a maximum velocity of 7 feet per second. No force main shall have an inside diameter of less than two (2) inches.

b) Force mains used to pump raw sewage shall have a minimum diameter of 4 inches, unless grinder pumps are used.

c) Thrust blocks or restraints shall be provided where applicable throughout the length of a force main and shall be designed to contain the resultant thrust forces. Thrust blocks and restraints shall conform to AWWA C-600 standards.

d) Force mains shall be located a minimum of 4.5 feet below finished grade to protect against freezing. In certain cases, force mains may have less soil cover, provided the line is pitched so that sewage is not retained in the line between pump cycles.

3. Installation Requirements

a) The width of trenches shall be adequate to allow sewer pipe to be laid and joined properly and to allow bedding and haunching to be placed and compacted to adequately support the pipe. Refer to Section XVIII, paragraph E concerning the material used for embedment around PVC pressure pipe.

b) For additional requirements concerning the installation of PVC pressure pipe, refer to ASTM standard D-2774 "Practice for Underground installation of Thermoplastic Pressure Piping".

c) Force mains constructed of ductile iron pipe shall be installed in accordance with AWWA C-600 standard.

4. Testing

Force mains shall be pressure tested at 200 psi for a minimum of 30 minutes to assure water tightness prior to backfilling. The contractor shall conduct the test in the presence of the certifying design professional.

5. Certification

A licensed design professional shall certify that all material, methods of construction, installation and testing meet the requirements of these standards as well as plans approved by the Department. Refer to **Appendix C** of these standards.

6. Exceptions

The Department may accept force main designs which vary from the standards in cases of small sewage flows provided that the licensed design professional submits engineering justification acceptable to the Department.

XXIV. PUMP-OUT FACILITIES

1. General

When required, pump-out facilities for the purpose of emptying marine vessel, bus, or RV holding tank wastes shall be located in areas that are easily accessible for proper operation, maintenance, or replacement. The construction of such facilities shall meet the requirements of the NYSDEC and all other applicable authorities where required. Provisions for pump-out facilities should be based upon the following guidelines:

2. Design Considerations

a) Pump-out units may be portable or permanent, and should include a vacuum pump or a positive displacement type of pump to empty marine vessel and boat holding tank wastes. Pump-out units may be electrically or manually operated. If pump-out units are electrically operated, then all electrical components must be explosion proof, and meet NEC requirements.

b) All pump-out units shall be provided with a flexible suction hose and dripless nozzle.

c) All mechanical and electrical components must be adequately protected from freezing.

d) Pump-discharge piping or force mains must be constructed of materials and joints that meet water main standards. The force main may be constructed of Type 1, Grade 1, schedule 80 PVC sewer pipe, or PVC pressure rated SDR 18 pipe.

e) All pump-out units should be provided with a non-potable water service and an approved backflow prevention device for rinsing the onboard holding tanks.

f) Holding tanks shall be located in accordance with Table 2 Section XI.

g) The minimum capacity of any holding tank shall be 1000 gallons, but a greater volume may be required, as determined by the Department.

h) Holding tanks shall be made watertight and leak tested to ensure tightness prior to operation. Maximum permissible leak rate is ¼ inch in 8 hours.

COUNTY OF SUFFOLK

STEVE LEVY
SUFFOLK COUNTY EXECUTIVE

SUFFOLK COUNTY
DEPARTMENT OF HEALTH SERVICES
DIVISION OF ENVIRONMENTAL QUALITY

STANDARDS FOR APPROVAL OF PLANS
AND CONSTRUCTION FOR
SEWAGE DISPOSAL SYSTEMS FOR
OTHER THAN SINGLE-FAMILY RESIDENCES

APPENDIX A

STANDARDS FOR CONSTRUCTION OF MODIFIED SUBSURFACE SEWAGE DISPOSAL SYSTEMS AND SMALL COMMUNITY SEWERAGE SYSTEMS

December 1, 2009

Linda Mermelstein, M.D., M.P.H.
Acting Commissioner of Health Services

Vito Minei, P.E.
Director of Environmental Quality

A3. LOCATION OF MODIFIED SUBSURFACE SEWAGE DISPOSAL SYSTEMS AND SMALL COMMUNITY SEWAGE SYSTEMS

Modified subsurface sewage disposal systems and small community sewage systems shall be located to ensure that they do not cause contamination of drinking water supply wells. They shall be located to prevent airborne spread of pathogens and minimize nuisance odors and noise. Refer to the STANDARDS for additional information concerning the location and siting of sewage treatment facilities.

The following criteria also apply to these sites:

1. Modified subsurface sewage disposal systems and small community sewerage systems shall be located to maximize distances to drinking water supply wells. To protect the drinking water supply, all projects will undergo a separate site review within the Suffolk County Department of Health Services (SCDHS). If the SCDHS determines that insufficient distance exists to protect wells, or there is a preferred placement because of groundwater flow direction, further measures, including but not limited to relocation, effluent disinfection or additional sewage treatment may be required.

2. Modified subsurface sewage disposal systems and small community sewerage systems shall be located so as to maximize distances to freshwater wetlands, tidal wetlands, ponds, streams, and other surface waters, provided the minimum separation distances in Tables A1 and A2, are met.

3. Modified subsurface sewage disposal systems and small community sewerage systems shall be located in an area that is easily accessible for purposes of maintenance and / or replacement of sewage treatment or disposal facilities. Additionally, treatment and disposal facilities shall not be located within areas used for parking, easements or rights-of-way. Adequate security fencing shall be provided around all sewage treatment components.

4. A buffer area of one hundred (100) feet shall be provided surrounding the area of the facilities including the expansion area. The buffer area shall be measured as a radius from the outermost dimensions of the tanks and expansion area. There shall be no substantial human use of the buffer area. Swimming pools, tennis courts or other recreational enhancements, parking lots, mailboxes or other building amenities shall not be located within the buffer area. This area shall be used exclusively for plantings that serve to screen the facilities from view. Effluent leaching pools may be placed in the buffer area.

5. Modified subsurface sewage disposal systems and small community sewerage systems shall be located as far as possible from human habitation, surface water, and areas of substantial use by the public. Separation distances, as listed in Table A1 below, are considered to be the **minimum** allowable and are based upon a typical system that is properly designed, constructed, well operated and judiciously maintained. Reasonable efforts should be made to ensure maintenance of these minimum separation distances, including evaluating alternative site layouts and changing density load.

TABLE A1 - MINIMUM SEPARATION DISTANCES**

Separation Distances From The Nearest Part Of:	To HABITABLE * Building	To NON-HABITABLE Building	To Area of Substantial Human Use (Buffer Area)	To Property Lines	To Surface Water
Enclosed Process Tanks and Expansion Area	200 ft.	100 ft.	100 ft.	150 ft.	100 ft. or as set by NYSDEC or local wetlands permit.
Leaching Pools and L.P. Expansion Area	25 ft.	25 ft.	May Be Included	25 ft.	100 ft. or as set by NYSDEC or local wetlands permit.

* For purposes of this appendix, **HABITABLE** buildings include those buildings intended for permanent or transient residency or recreational use, and commercial buildings in substantial use by the public (i.e., condos, apartments, co-ops, PRC, assisted living, townhouses, hotels, motels, community clubhouses, office buildings, retail stores, restaurants, etc.).

** The minimum separation distances found in TABLE 2 of the (main body of the) STANDARDS also apply to modified subsurface sewage disposal systems and small community sewerage systems.

6. In accordance with the New York State Department of Environmental Conservation publication, **Design Standards for Wastewater Treatment Works, Intermediate Sized Sewerage Facilities**, the minimum separation distances to on-site buildings or property lines listed in **Table A1** may be reduced if special designs or considerations warrant reduced distances. Special designs and considerations that may warrant reduced distances can be found in the following section of this document.

A4. SPECIAL DESIGN CONSIDERATIONS THAT MAY WARRANT REDUCED SEPARATION DISTANCES.

The separation distances as defined in **Section A3** above can be reduced when special site conditions exist or when the design of the modified subsurface sewage disposal system or small community sewerage system is enhanced beyond the level otherwise required by these standards, as defined in paragraph A4.2 below.

1. Special Site Conditions

When a modified subsurface sewage disposal system or small community sewerage system is located near a property line that abuts a recharge basin, a major divided highway, limited access roadway, railroad right-of-way, utility easement, or areas designated as permanent open space, the separation distance to that property line can be reduced. Such abutting property may be included when determining separation distances cited as applicable in either Table A1 or Table A2. However, denitrification facilities (including leaching pools) shall not be placed closer than twenty-five (25) feet from the project property line.

2. Air Quality and Noise Abatement Enhancements

   Designs that provide for the adequate removal of aerosol emissions and the attenuation of odor and noise qualify for reduced separation distances.

   a) Aerosol Emissions and Odor Control

      Aerosol emissions and odors shall be removed by venting all exhaust air from process equipment and pumping stations through a carbon filter designed for that purpose or through the use of other type of removal devices acceptable to the SCDHS. The carbon filter shall be designed for ease of replacement of carbon. General ventilation equipment shall be capable of providing at least six (6) air changes per hour. Odor control equipment shall be capable of operating when power to the treatment units has failed. Designs and equipment specifications shall be submitted to the review engineer for evaluation.

   b) Venting

      Location and height of exhaust air ventilation shall be designed to minimize impacts to habitable areas.

   c) Noise Attenuation

      Noise attenuation is required when reduced separation distances are requested. Blowers and exhaust fans shall be placed in an enclosure designed with a rating sufficient to attenuate noise levels from the equipment to a maximum of 50 dbA as measured at a distance of twenty-five (25) feet from the equipment.

3. Addition of all of the above enhancements shall allow the separation distance from enclosed process tanks, expansion area, and/or exhaust air discharge location to be reduced to a minimum of seventy-five (75) feet to habitable buildings, as previously defined, and fifty (50) feet to non-habitable buildings, such as separate garages or maintenance type buildings. A buffer area of fifty (50) feet minimum is required. Swimming pools, parking areas, mailboxes, playgrounds, tennis courts, or any other amenities shall not be placed within the fifty foot buffer area. This buffer area may be reduced when special site conditions are present as described in paragraph A4.1 above.

This area shall be used for plantings that serve to screen the facilities from view. Effluent leaching pools may be placed in the buffer area. Modified distance requirements are summarized in Table A2 below.

TABLE A2 - MODIFIED SEPARATION DISTANCES**

Separation Distances From The Nearest Part Of:	To HABITABLE * Building	To NON-HABITABLE Building	To Area of Substantial Human Use (Buffer Area)	To Property Lines	To Surface Water
Enclosed Process Tanks and Expansion Area	75 ft.	50 ft.	50 ft.	75 ft.***	100 ft. or as set by NYSDEC or local wetlands permit.
Leaching Pools and L.P. Expansion Area	25 ft.	25 ft.	May Be Included	25 ft.	100 ft. or as set by NYSDEC or local wetlands permit.

* For purposes of this appendix, **HABITABLE** buildings include those buildings intended for permanent or transient residency or recreational use, and commercial buildings in substantial use by the public (i.e., condos, apartments, co-ops, PRC, assisted living, townhouses, hotels, motels, community clubhouses, office buildings, retail stores, restaurants, etc.).

** The minimum separation distances found in TABLE 2 of the (main body of the) STANDARDS also apply to modified subsurface sewage disposal systems and small community sewerage systems.

*** May be reduced to twenty-five (25) feet when special site conditions as noted in paragraph A4.1 are present and when reduced distance does not interfere with future building setbacks for off-site vacant parcels.

When a distance reduction is made for a multiple ownership project such as a condominium, the offering plan shall contain language indicating that special risks are present due to the reduction in distance.

Any reduction in the distances prescribed in Table A2, will require a variance from the SCDHS Board of Review.

A5. FINAL RECHARGE

Effluent from the treatment facility shall be piped to subsurface pre-cast concrete leaching pools in accordance with provisions in the STANDARDS. The maximum hydraulic leaching rate of 5 gal./sq.ft./day shall be used without positive filtration. Alternative designs for effluent disposal may be submitted for review by the SCDHS.

A6. EXPANSION AREA REQUIREMENTS

An adequate area shall be available to allow for a minimum of one hundred percent (100%) expansion/replacement of the modified subsurface sewage disposal systems and small community sewerage treatment and disposal facilities. The area provided for expansion/replacement shall be contiguous to the planned location of treatment and disposal facilities. Required buffer area shall be located outside of the expansion/replacement area for processes. Leaching pools and required expansion/replacement area for

leaching may be placed within the buffer area provided that applicable separation distances listed in the tables are maintained. Deepening of leaching pools is not permitted in lieu of providing expansion/replacement area.

A7. LABORATORY REQUIREMENTS

All modified subsurface sewage disposal systems and small community sewerage systems shall provide the means necessary for proper process control and operation. An area for laboratory facilities shall be provided in a building on the plant site. The laboratory shall be equipped with bathroom facilities and shall be heated and ventilated to provide an indoor temperature of at least 70 degrees F when the outside temperature is 0 degrees F.

A8. ODOR CONTROL REQUIREMENTS

The SCDHS reserves the right to require all remedial actions necessary; including but not limited to enclosing of odor and noise causing facilities and the installation of odor and emissions control equipment should nuisance conditions arise during actual plant operation. Approval of sewage treatment facility site location and design shall not be interpreted as relieving the owners from responsibility for remedial action should nuisance conditions arise in the future.

A9. SPDES PERMIT REQUIRED

A State Pollutant Discharge Elimination System (SPDES) permit, issued by the New York State Department of Environmental Conservation (NYSDEC), or its agent, is required prior to the issuance of a permit to construct. A SPDES permit is necessary when the project design sewage flow (total hydraulic load) is 1,000 gpd or greater. These permits require monitoring of the system influent, and effluent for flow and total nitrogen. Other parameters and sampling requirements may be imposed.

A10. MONITORING WELLS

1. Applicability

   Monitoring wells are designed to provide a means of obtaining shallow groundwater quality samples in proximity to sewage treatment plant effluent discharges to assure that SPDES permit conditions are being met, to determine whether such conditions are adequate to protect groundwater, and other purposes determined by the commissioner of the SCDHS.

2. Siting / Location

   The applicant's engineer shall include the location of all proposed and /or existing monitoring wells on the site plans together with the direction of groundwater flow. The required array of monitoring wells must provide a means of determining plant discharges on a continuous basis, and shall include the following:

COUNTY OF SUFFOLK

STEVE LEVY
SUFFOLK COUNTY EXECUTIVE

SUFFOLK COUNTY
DEPARTMENT OF HEALTH SERVICES
DIVISION OF ENVIRONMENTAL QUALITY

STANDARDS FOR APPROVAL OF PLANS
AND CONSTRUCTION FOR
SEWAGE DISPOSAL SYSTEMS FOR
OTHER THAN SINGLE-FAMILY RESIDENCES

APPENDIX C

REQUIREMENTS OF DEPARTMENT OF HEALTH SERVICES AND RESPONSIBILITIES OF LICENSED DESIGN PROFESSIONALS IN INSPECTING SEWAGE TREATMENT WORKS OR COLLECTION SYSTEMS

December 1, 2009

Linda Mermelstein, M.D., M.P.H.
Acting Commissioner of Health Services

Vito Minei, P.E.
Director of Environmental Quality

FIGURE 7
TYPICAL LEACHING POOL

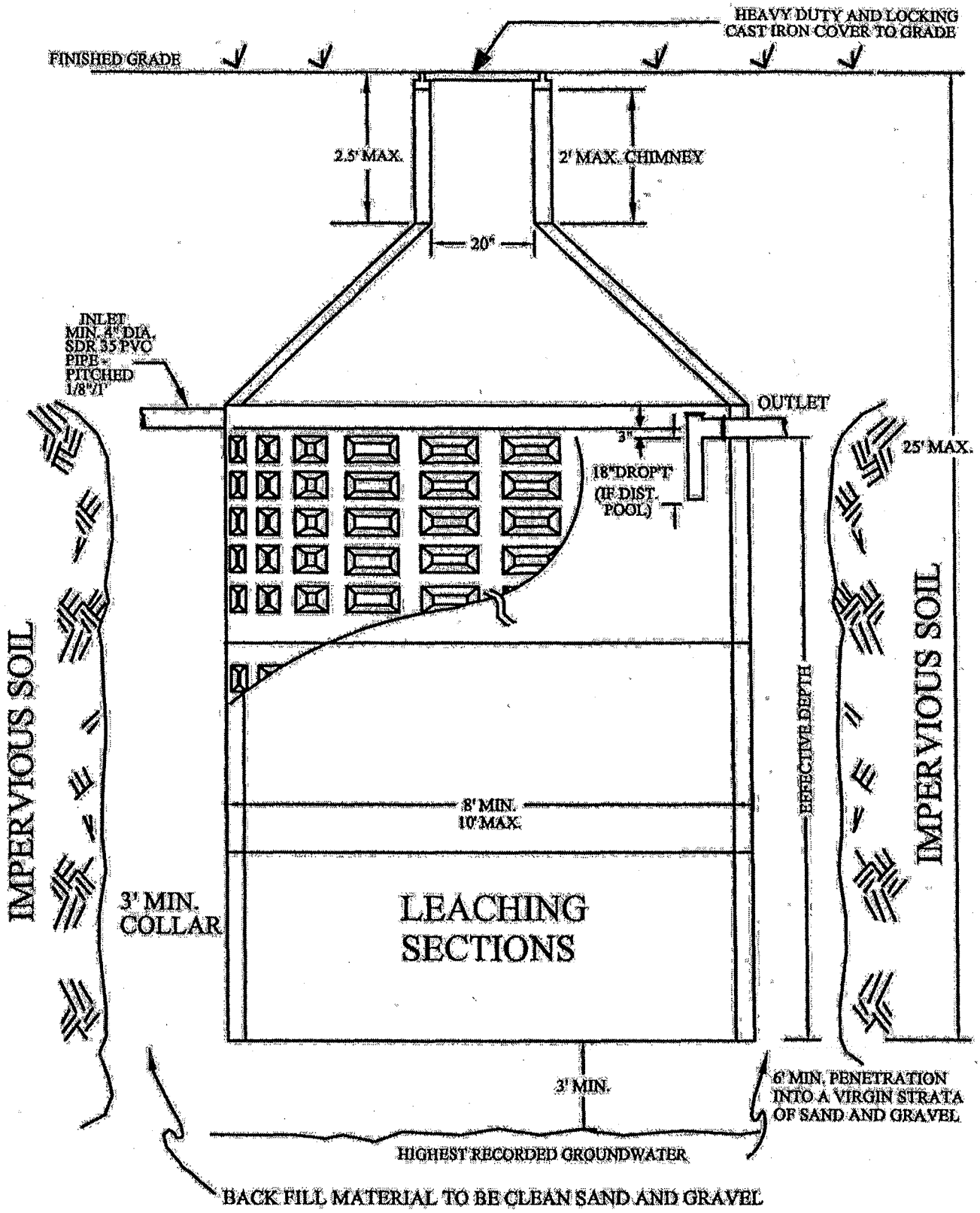

FIGURE 8
TYPICAL MULTIPLE LEACHING POOL ARRANGEMENTS

1-3 POOLS

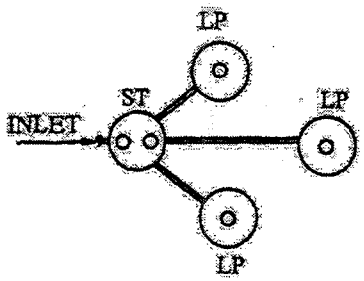

4 POOLS

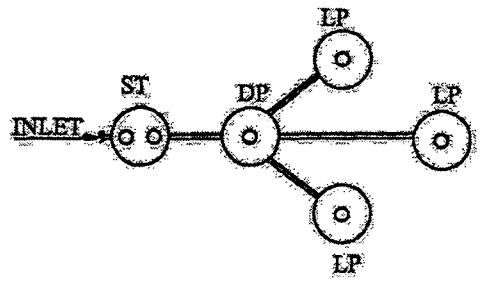

5 POOLS

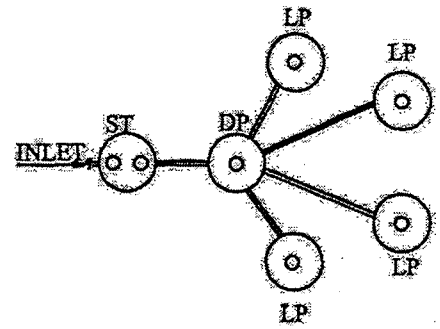

6-10 POOLS

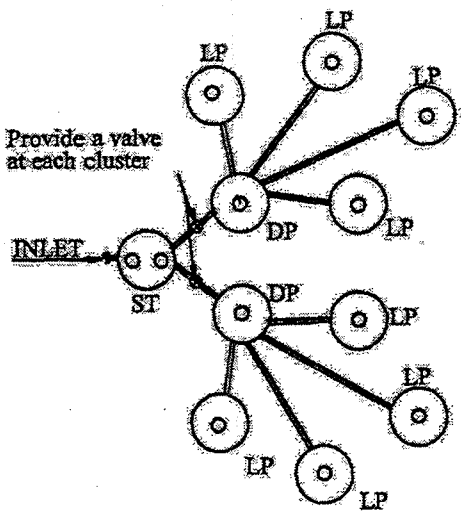

11-15 POOLS

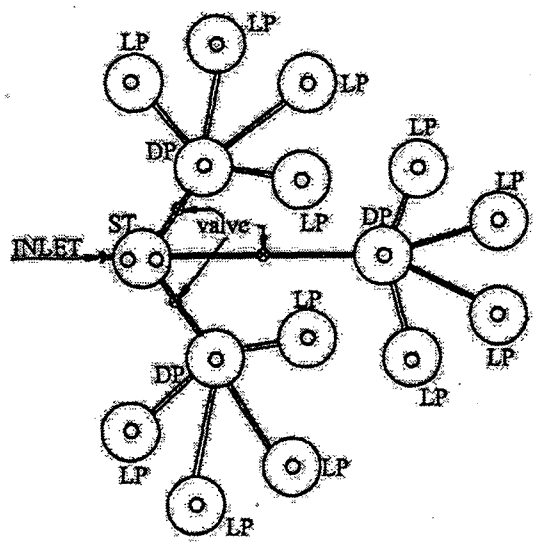

16-21 POOLS

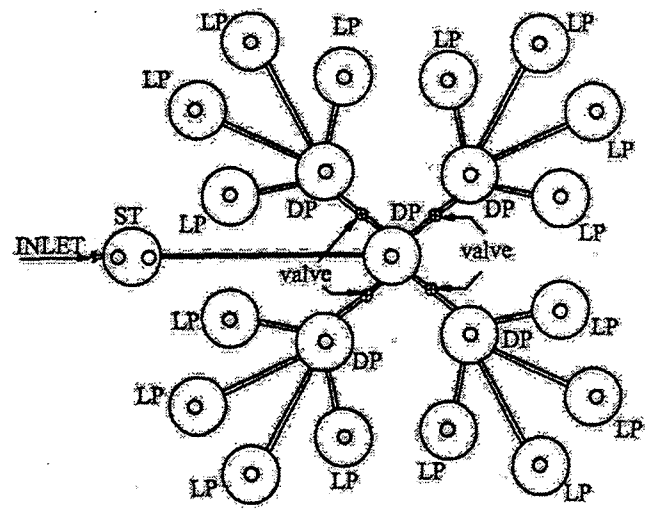

ST = SEPTIC TANK
LP = LEACHING POOL
DP = DISTRIBUTION POOL

MAINTAIN EQUAL DISTRIBUTION OF POOLS IN EACH CLUSTER
MAINTAIN 8' BETWEEN ALL STRUCTURES.

FIGURE 9
TYPICAL ACCESS/JUNCTION MANHOLE

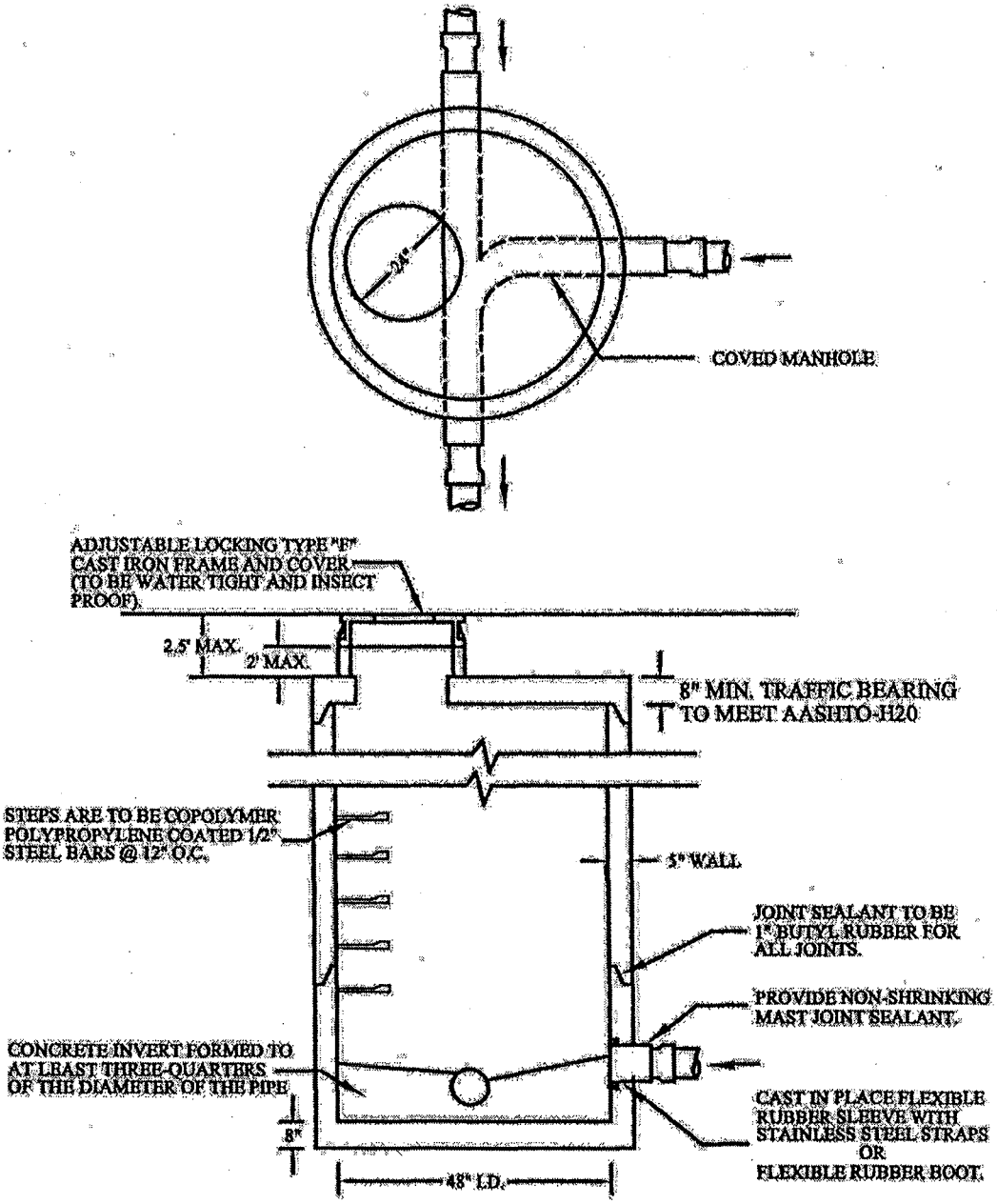

1. ALL MANHOLE SECTIONS SHALL CONFORM TO A.S.T.M. C-478, LATEST REVISION STANDARD SPECIFICATIONS FOR PRECAST REINFORCED CONCRETE M.H. SECTIONS.
2. MANHOLE RISER SECTION TO BE FURNISHED IN 1,2,3, OR 4' HEIGHTS, AS REQUIRED.
3. LOADING TO CONFORM TO AASHTO H-20 LOADING.
4. ALL CONCRETE IS TO MEET 4000 PSI AT 28 DAY SET.
5. OUTLET PIPE TO BE SET 0.1' MINIMUM BELOW INLET PIPES.
6. THE MAXIMUM CHANGE IN ELEVATION BETWEEN INLET AND OUTLET INVERT(S) SHALL BE NO GREATER THAN 2 FEET.

Greater Bellport
STP Siting Options Feasibility Study

Appendix No. 2: Town of Brookhaven - Recharge Basin Calculations

From: Gregg Kelsey [mailto:GKELSEY@BROOKHAVEN.ORG]
Sent: Monday, December 31, 2012 10:27 AM
To: Brusseau, Mike; Rob Raab
Cc: Diane Mazarakis
Subject: Part 2 e-mail

Rob

Here is the second e-mail

Gregg

Rob

I did some work on the recharge basin to evaluate the existing storage capacity and how we would accommodate new leaching pools for the treatment plant.
Attached as some sketches and the original drainage plans and as-builts.

I found it interesting that after designing a new bench in the side slope of the recharge basin, for 40 leaching pools, I was only 6000 cubic feet short of the original storage requirement for the recharge basin.
It turns out, at least on paper, and with a strong degree of certainty that the existing recharge basin is storing well over the required amount. We calculate 493,814 cubic feet is stored where 309,129 is required.
This provides some opportunity and should help in obtaining approval from the highway department.

In my analysis I determined the existing storage, a first stab at providing the bench for the leaching pools, then a revised plan where I laid out the pools with a distribution pipe from the existing sanitary recharge area, then lowered the bottom and modified the side slope to be 1 on 3 at 5 feet below the existing bottom. Again after all, there is plenty of capacity and there should be no problem utilizing this recharge basin as we are proposing.

The layout of pools shows 40 - 16 feet deep pools with 10 feet separation and a distribution pipe at 0.40%. I reviewed the pool design for BSD # 2, which is a 200,000 gpd plant with 40 pools at 16 feet deep. The proposed invert of the pipe at the overflow structure is elevation 51.0. The bottom is 50 and I assume the top is 55.0. The existing bed can overflow after 1 foot of flow, of as adjusted higher with an overflow structure or valve configuration. Ben had mentioned this concept at our last meeting when designing this expansion. If needed there is room to modify how ever they would want.

Take a look and ask me any questions. I think the report should go into this concept, so DPW can agree with the expansion and SCDHS can approve. I think we should also provide a plan for expansion on the other side of the existing leaching pools up to the property line, the buffer on Park land. We can then demonstrate plus or minus 400,000 gpd expansion.

They can then take the land or in this case maybe an expansion of the existing easement from 30 feet to 115 feet, which would bring their access to the high water mark. More than enough of install and maintain these new leaching pools. The access area is 33 feet wide at an elevation of 55.0 feet, which is close to the existing grade in the STP parcel.

Im sending my notes and calculations for you to have.
When we consider this as a project, we should also consider how we can balance the excavation and fill to cost the project the least amount of money. I figures the amount of fill coming from the new leaching pools, but didn't calculate the regrading figures above the high water mark. So the reason to dig the basin deeper is to provide fill for the new bench and regrading above the existing grade.

I've attached the drainage plans and file maps too.

Happy New Year.

Gregg

Gregg G. Kelsey P.E.
Assistant Town Engineer

Town of Brookhaven
1 Independence Hill
Farmingville, NY 11738

631-451-6490
631-451-6419 fax

12/27/12

Recharge Basin #1
Woodside Manor sect 1 to 4

existing RB design

341,200 ± cubic ft storage provided
309,129 ± cubic ft " required

revised RB storage calculation – maintain bottom elevation

Area 5 5,257 ft²
" 5A 892 + 5257 = 6149

$V_5 = \frac{6149 + 5257}{2} \times 2 = 11,406$ cu ft

Area 4 = 25,495 ft²
" 4A 25495 + ~~6149~~ ~~5257~~ 6149

$V_4 = 31,644$ ft³

Area 3 = 39,886 ft²
47.25 - 43.25 = 4

$V_{34} = \frac{31,644 + 39,886}{2} \times 4$

$V_{34} = 143,060$ cu ft

Area 2 = 48,864 ft²
Area 1 = 61,140 ft²
51.25 - 47.75 = 3.5

$V_{12} = \frac{61,140 + 48,864}{2} \times 3.5$

$V_{12} = 192,507$ cu ft

Total Storage of revised RB = $V_{12} + V_{34} - V_5$ = 192,507 + 143,060 − 31,644

$V_T = 303,923$ cu ft

revised RB storage calculation – lower bottom 5 feet

Area 3 = 39,886 ft²
Area

Area 6 = 19,178 ⌀

Area 7 = 2670 ⌀
Area 7a = 2670 + 890 = 3564 ⌀

$$V_7 = \frac{2670 + 3564}{2} \times 2 = 6234 \text{ ⌀}$$

Area 6a = 19,178 + 3564 = 22,742 ⌀
47.25 - 38.25 = 9

$$V_{36} = \frac{22,742 + 39886}{2} \times 9 = 281,826 \text{ cu ft}$$

$$V_T = V_{36} + V_{12} - V_7 = 281,826 + 192,507 - 6234$$

$$V_T = 468,099 \text{ cu ft.}$$

check existing RB storage calculation

Area 15 = 26,461 ⌀
Area 13 = 8,250 ⌀

Area 14 = 14,731 ⌀
Area 14a = 14731 + 1220 = 15,951 ⌀
Area 14b = 15,951 - 776 = 15,175 ⌀
Area 12 = 59,090 ⌀
47.25 - 43.25 = 4'

$$V_{12\,(13-15)} = \frac{59,090 + 8,250 + 15\cancel{951}\,175 + 26,461}{2} \times 4 =$$

$$V_{12\,(13-15)} = 217,952 \text{ cu ft.}$$

$$V_{14\,14_b} = \frac{14,731 + 15,175}{2} \times 2 = 29,906 \text{ ⌀}$$

Area 11 = 69,159 ft

Area 10 = 83,725 ft

51.25 - 47.25 = 4'

$$V_{10-11} = \frac{83,725 + 69,159}{2} \times 4 = 305,769 \text{ cu ft.}$$

$$V_T = V_{10-11} + V_{12(13-15)} - V_{14\ 14b}$$

$$= 305,769 + 217,952 - 29,906 = 493,814 \text{ cu ft.}$$

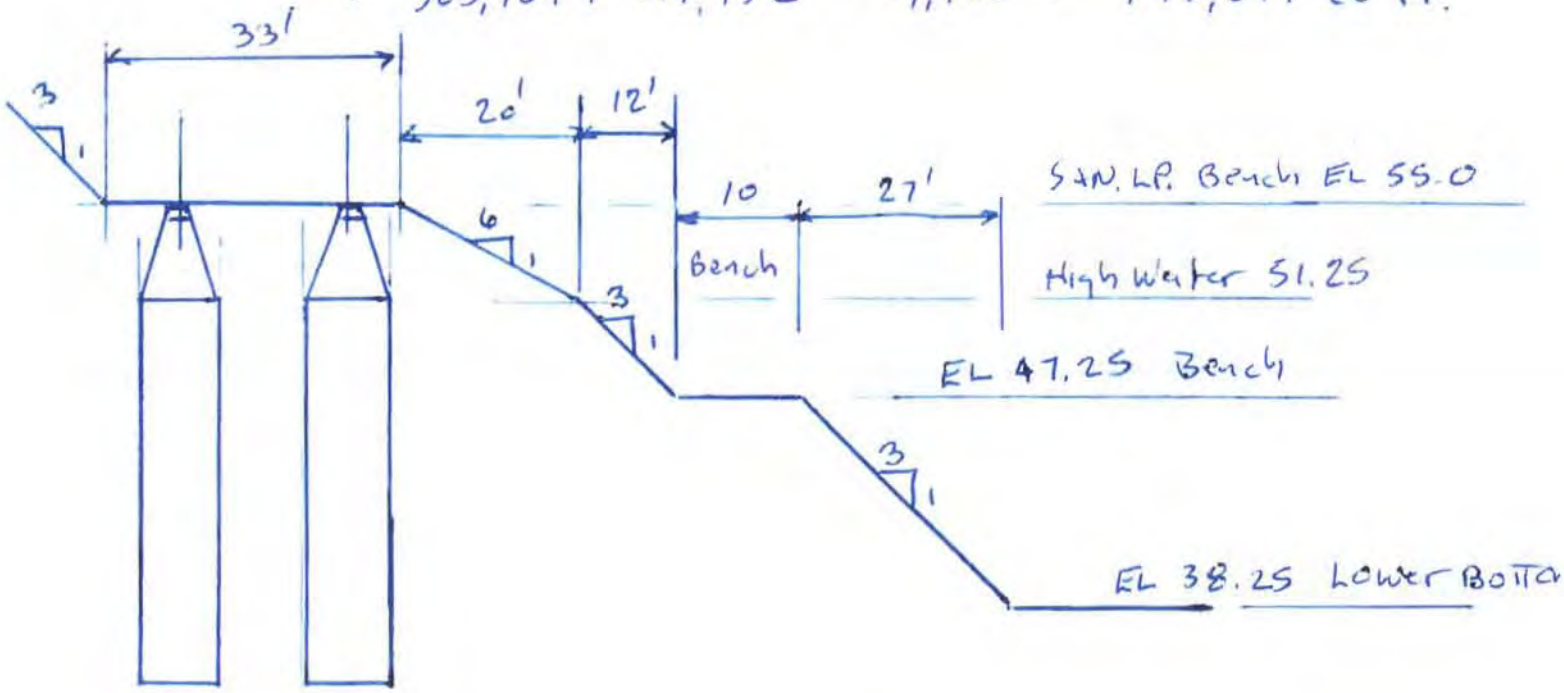

SECTION A-A

NTS

$$V = \frac{\pi\ 3.75}{2}\left(10^2 + 10 \times 2 + 2^2\right) = 730 \text{ cu ft Done}$$

$$V = \frac{\pi d^2}{4} = \frac{\pi\ 10^2}{4} = 78.5 \times 16' \text{ deep} = 1256.6$$

1 leaching pool = 1256.6 + 730 = 1986.6 cu ft

× 40 leaching pools

79,465 cu ft volume

current RB volume 493,814 cubic ft.

plan shows volume provided 341,200 cubic feet.
" " " required 309,129 cubic feet

therefore actual High water mark of 51.25 is not accurate
High water is much lower.

91,177 cu ft
14,566
3,041.5/ft 1.3 = 92.901

High water is estimated at 48.53

47.25 + 1.3 = 48.53

RECHARGE BASIN #1

STORE 32% OF 8" RAIN

CONTRIBUTING AREA = 33.06 AC.

STORAGE REQ'D = 33.1 × 43,560 × 0.32 × 0.67

= 309,129± CF

STORAGE PROVIDED = 341,200± CF > 309,129± CF

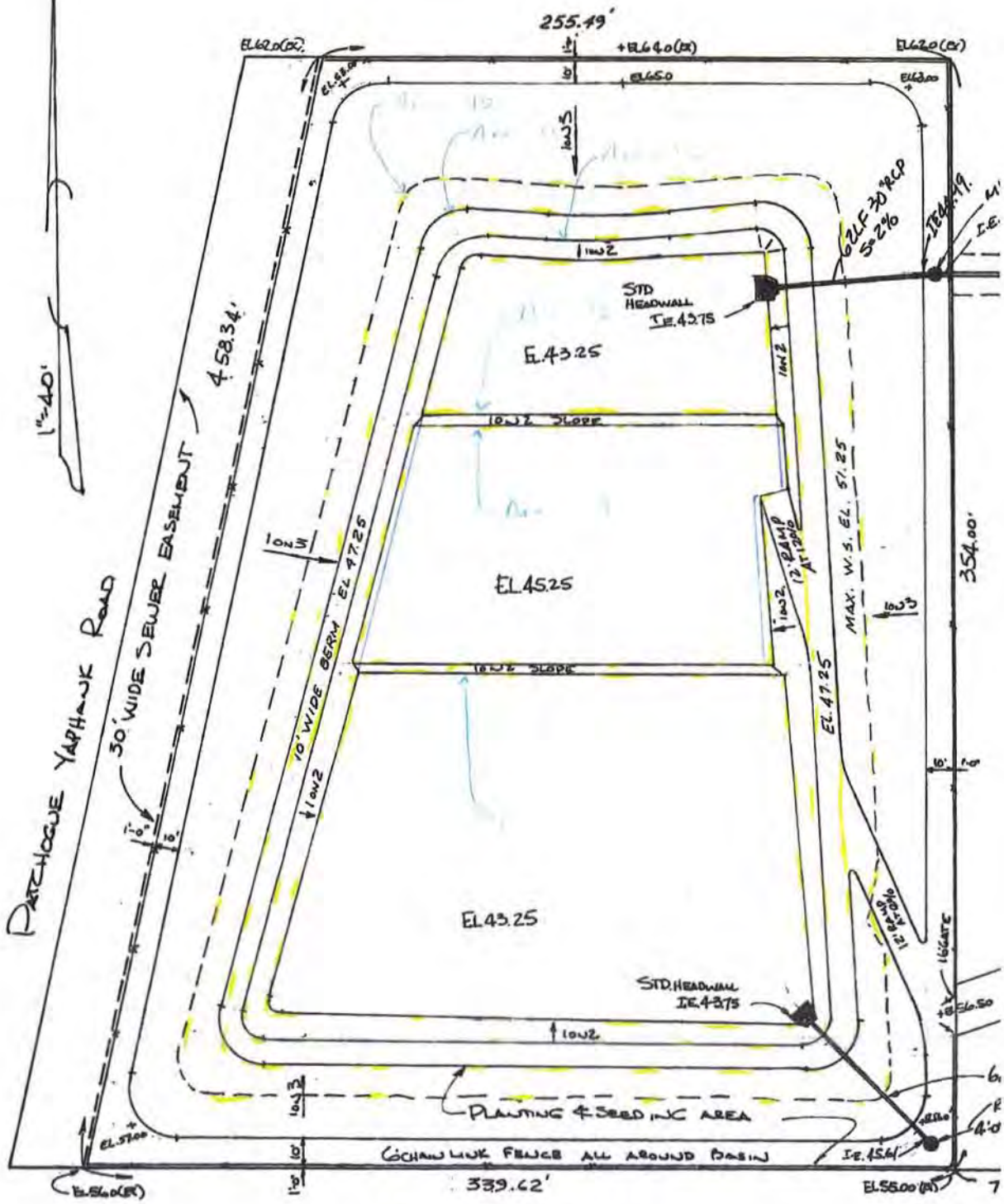

SEWAGE TREATMENT PLANT

RECHARGE BASIN #1 1"

RECHARGE BASIN #1

STORE 32% OF 8" RAIN

CONTRIBUTING AREA = 33.06AC.

STORAGE REQ'D = 33.1 x 43,560 x 0.32 x 0.67

= 309,129± CF

STORAGE PROVIDED = 341,200± CF > 309,129± CF

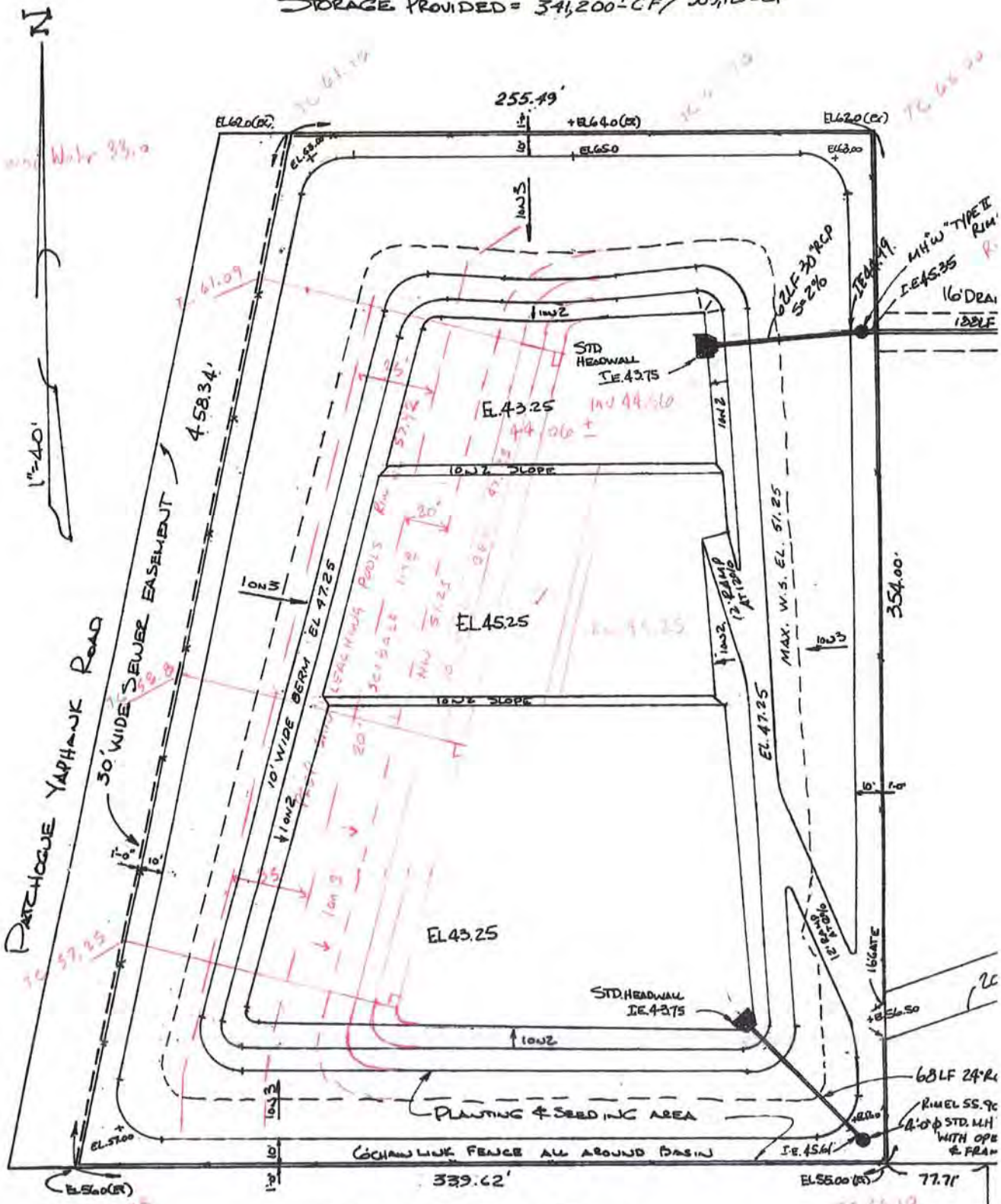

SEWAGE TREATMENT PLANT

RECHARGE BASIN #1 1" = 40

original

RECHARGE BASIN #1

STORE 32% OF 8" RAIN

CONTRIBUTING AREA = 33.06AC.

STORAGE REQ'D = 33.1 x 43,560 x 0.32 x 0.67

= 309,129± CF

STORAGE PROVIDED = 341,200± CF > 309,129± CF

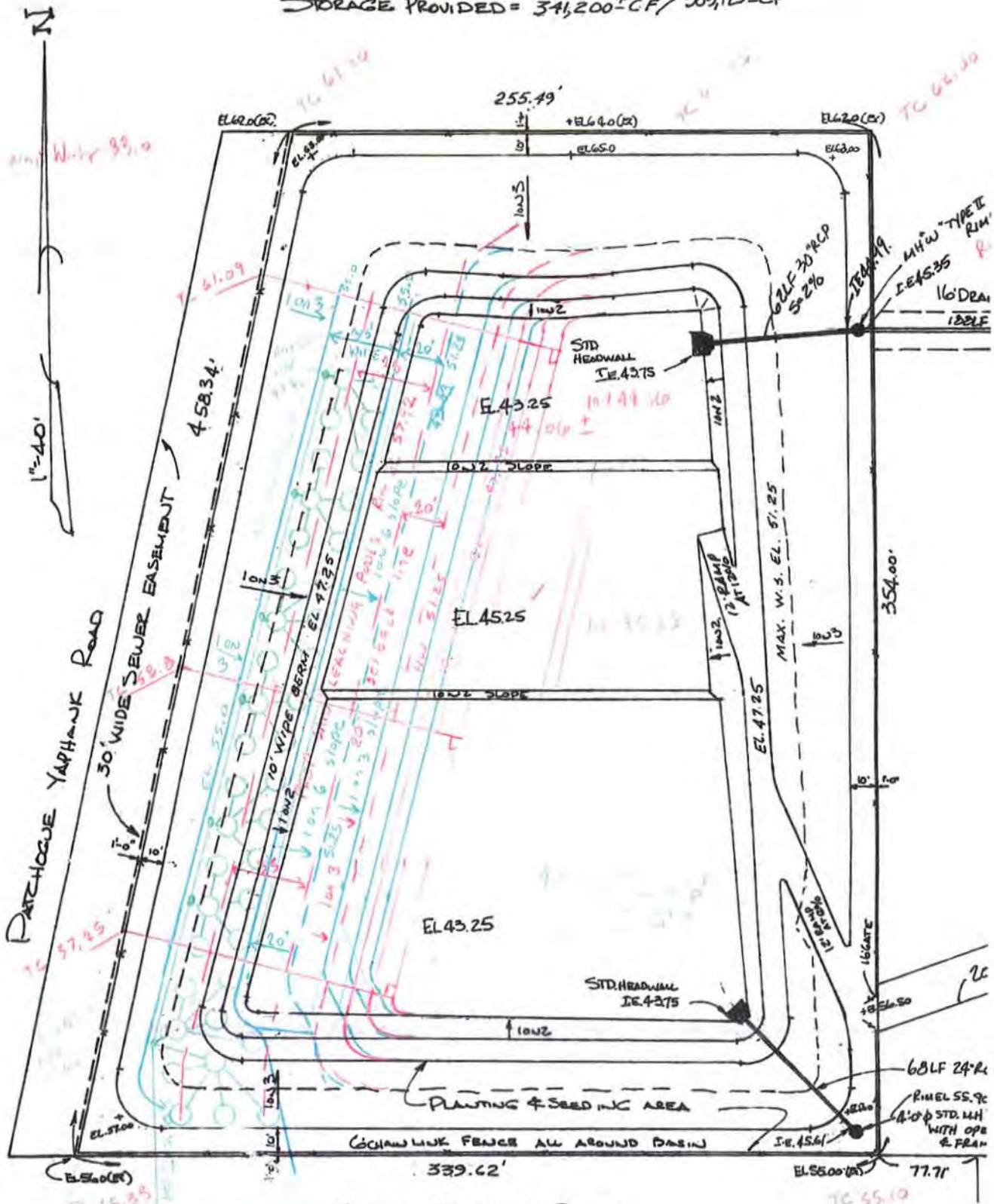

RECHARGE BASIN #1

STORE 32% OF 8" RAIN

CONTRIBUTING AREA = 33.06AC.

STORAGE REQ'D = 33.1 x 43,560 x 0.32 x 0.67

= 309,129± CF

STORAGE PROVIDED = 341,200± CF > 309,129± CF

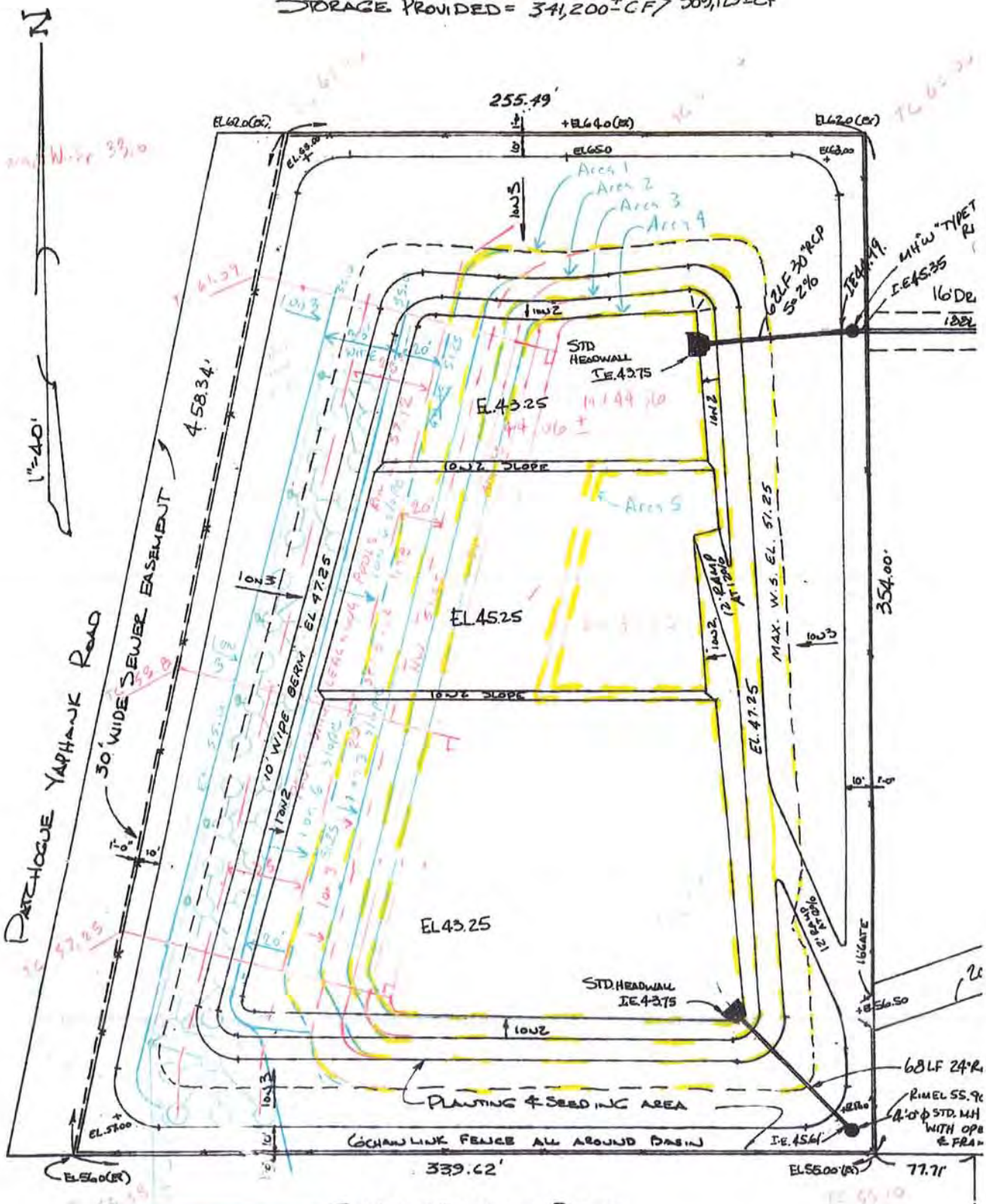

SEWAGE TREATMENT PLANT

RECHARGE BASIN #1 1"=40

RECHARGE BASIN #1

STORE 32% OF 8" RAIN

CONTRIBUTING AREA = 33.06AC.

STORAGE REQ'D = 33.1 x 43,560 x 0.32 x 0.67

= 309,129± CF

STORAGE PROVIDED = 341,200± CF > 309,129± CF

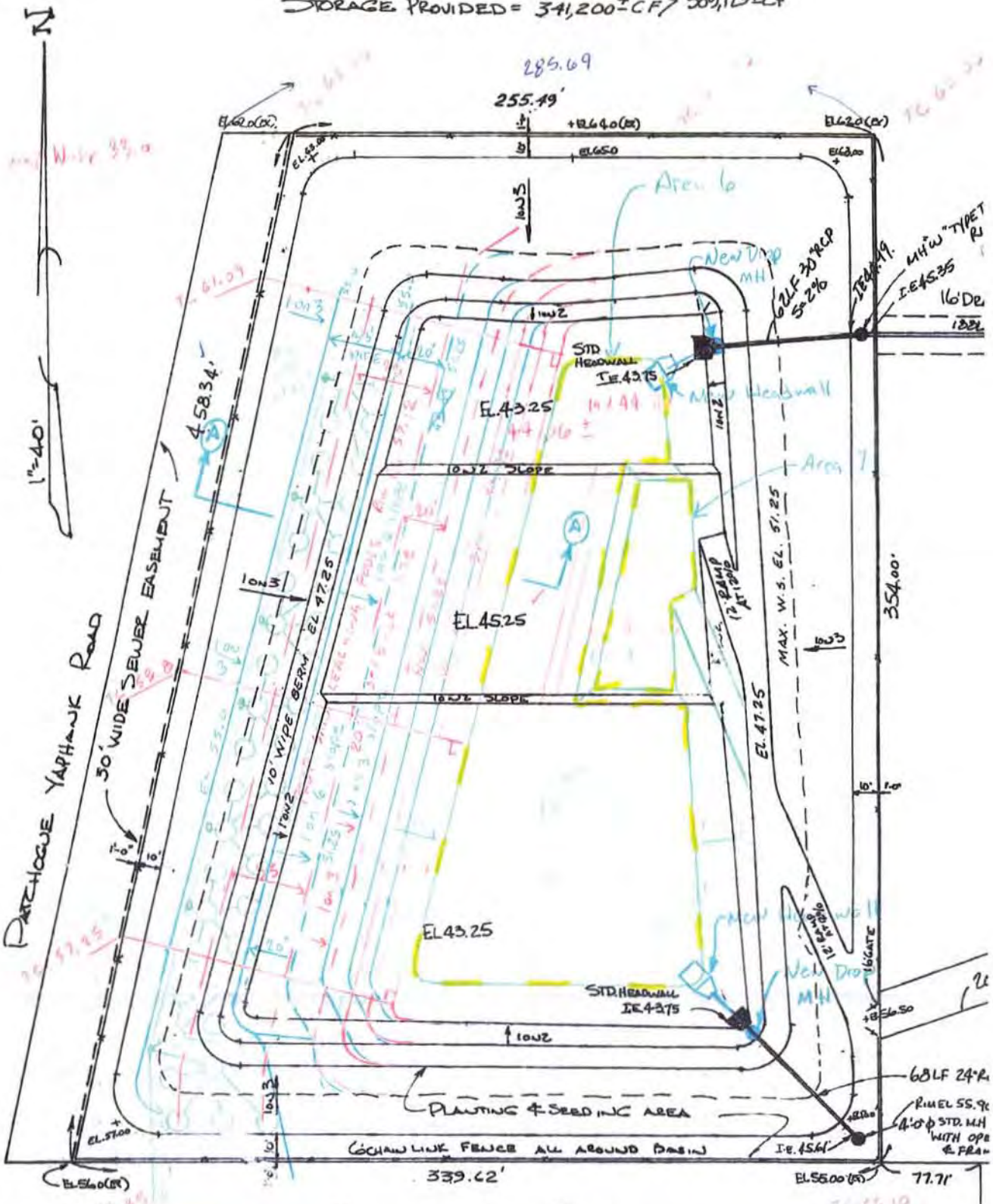

#1

RECHARGE BASIN 1"=40

Greater Bellport
STP Siting Options Feasibility Study

Appendix No. 3: Proposed Force Main - Calculations

$Hf = 0.2083\left[\left(\frac{100}{C}\right)^{1.852} x \frac{q^{1.852}}{d^{4.8655}}\right]$	Head losses
$V = 0.3208\, x \frac{q}{A}$	Velocity of flow
$A = \frac{d^2\pi}{4}$	Cross sectional area of pipe
C= 150	New pipe coefficient
q= flow in gal/min	Flow in pipe
d= ID	Diameter of pipe
FM L	Length of force main

FORCE MAIN HEAD LOSSES

Flow 1:	20,000	gpd				
C =	150					
q =	13.89	gpm	20,000	gal/day	0.03	ft^3/sec
No. of Pipes =	1					
d =	3	in				
A =	7.07	sq in	0.05	ft^2		
V =	0.63	fps				
Hf =	0.061285	ft/100ft				
FM L =	10,267	ft				
Total Hf =	6.29	ft				

Flow 2:	80,000	gpd				
C =	150					
q =	27.78	gpm	40,000	gal/day	0.06	ft^3/sec
No. of Pipes =	2					
d =	3	in				
A =	7.07	sq in	0.05	ft^2		
V =	1.26	fps				
Hf =	0.221239	ft/100ft				
FM L =	10,267	ft				

Total Hf =	22.71	ft				
Flow 3:	135,000	gpd				
C =	150					
q =	46.88	gpm	67,500	gal/day	0.10	ft^3/sec
No. of Pipes =	2					
d =	3	in				
A =	7.07	sq in	0.05	ft^2		
V =	2.13	fps				
Hf =	0.583066	ft/100ft				
FM L =	10,267	ft				
Total Hf =	59.86	ft				

Greater Bellport
STP Siting Options Feasibility Study

Appendix No. 4: Environmental Justice Area – Review Requirements

NEW YORK STATE
DEPARTMENT OF
ENVIRONMENTAL CONSERVATION

Environmental Justice

The 2012 Environmental Justice Community Impact Grants are coming soon! Please check back on this site periodically for more announcements.

What is Environmental Justice?

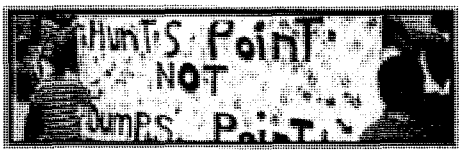

Environmental justice is defined as the fair treatment and meaningful involvement of all people regardless of race, color, national origin, or income with respect to the development, implementation, and enforcement of environmental laws, regulations, and policies.

Environmental justice efforts focus on improving the environment in communities, specifically minority and low-income communities, and addressing disproportionate adverse environmental impacts that may exist in those communities.

Regulations in 6 NYCRR Part 487 on Environmental Justice Analysis for Siting of Electric Generation Facilities

The Department has adopted regulations in 6 NYCRR Part 487 to establish a regulatory framework for undertaking an analysis of environmental justice (EJ) issues associated with the siting of power plants pursuant to Article 10 (Article 10) of the Public Service Law. For more information about Part 487 go to the Part 487 Summary Page.

Flow chart of steps in EJ Analysis under Part 487 (PDF, 174 KB)

Please Note: The purpose of this office is to serve the environmental needs of minority and low-income communities. It is not intended for general environmental inquiries unrelated to the issues of Environmental Justice. Please consult the list of phone numbers and addresses for DEC programs to determine appropriate DEC contacts.

More about Environmental Justice:

News from the Office of Environmental Justice - Current projects and information from the DEC Office of Environmental Justice to help residents of environmental justice communities and members of the general public in New York State

DEC Environmental Justice Policy CP-29 - Commissioner Policy CP-29 provides guidance for incorporating environmental justice concerns into the New York State Department of Environmental Conservation (DEC) environmental permit review process, the DEC application of the State Environmental Quality Review Act, and some aspects of the DEC's enforcement program, grants program and public participation provisions.

Office of Environmental Justice Staff - New York State Department of Environmental Conservation Environmental Justice Program Staff

Environmental Justice Hotline - New York State Department of Environmental Conservation Environmental Justice Hotline

Environmental Justice Strategic Partnerships - Strategic partnerships between the Office of Environmental Justice, Division of Law Enforcement, and community stakeholders to improve the environmental quality of communities acroos the state.

Environmental Justice Community Impact Grant Program - Provides grants from $2,500 to $50,000 to community-based organizations for research and education projects that address multiple environmental harms and risks

Geospatial Information System (GIS) Tools for Environmental Justice - Links to Geographic Information System (GIS) Tools for environmental justice information

County Maps Showing Potential Environmental Justice Areas - Maps of New York State counties showing census block groups that qualify as Potential Environmental Justice Areas under NYSDEC criteria

Environmental Justice Interagency Task Force - Office of Environmental Justice Interagency Task Force

Environmental Justice Network - NYSDEC program staff who work closely with the Office of Environmental Justice

Environmental Justice Advisory Group - New York State Department of Environmental Conservation Environmental Justice Program Citizen Advisory Group

Environmental Justice Work Group Reports - Reports by the NYSDEC Environmental Justice Advisory Work Groups on Disproportionate Adverse Environmental Impact Assessment and Health Outcome Data

Environmental Justice Links - Links to Environmental Justice programs of the U.S. Environmental Protection Agency, several states, and some national non-profit organizations

Local and Regional Environmental Advocacy Organizations in New York State - Contact information and website links for over 400 environmental justice advocacy organizations in New York State, arranged by DEC Region and county

STEPS in EJ ANALYSIS

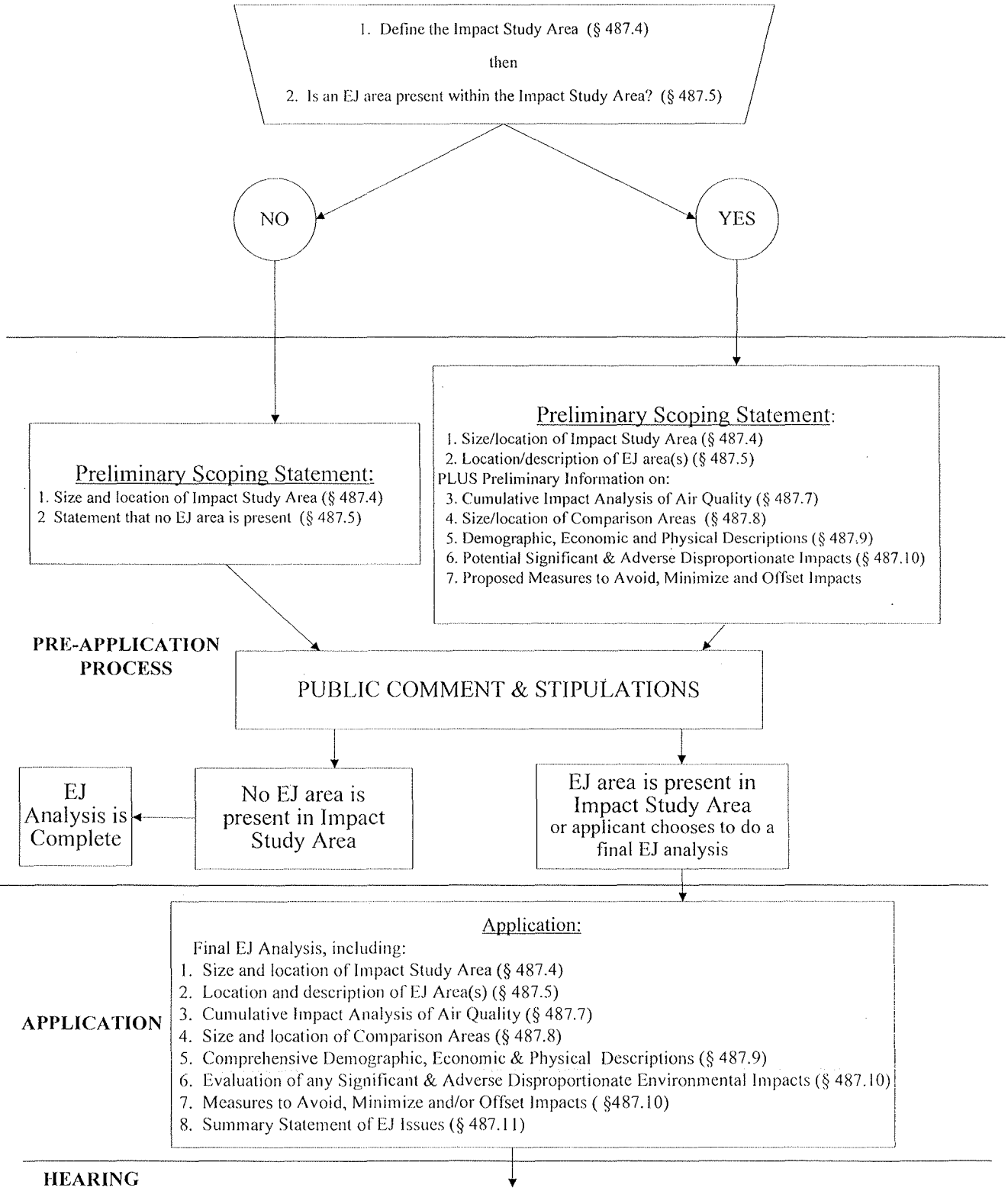

Greater Bellport
STP Siting Options Feasibility Study

Appendix No. 5: Construction Cost Breakdown

SUFFOLK COUNTY
Bellport, Town of Brookhaven

WASTEWATER CONVEYANCE SYSTEM
PS NORTH OF LIRR TRACKS
COST ESTIMATE

April 2013

SUFFOLK COUNTY **Bellport, Town of Brookhaven**		**Force Main**		**Gravity Sewer**	**TOTAL**
		Force Main	**Pumping Station**	**TOD/Hamlet CR**	
Raw Cost		*$ 2,989,980*	*$ 823,662*	*$ 2,808,800*	*$ 6,622,442*
Contractor Overhead & Profit	*21.0%*	*$ 627,896*	*$ 172,969*	*$ 589,848*	*$ 1,390,713*
	Subtotal:	**$ 3,617,876**	**$ 996,631**	**$ 3,398,648**	***$ 8,013,155***
Bond and Insurance	*6.0%*	*$ 217,073*	*$ 59,798*	*$ 203,919*	*$ 480,789*
	Subtotal:	**$ 3,834,948**	**$ 1,056,429**	**$ 3,602,567**	***$ 8,493,945***
Construction Contingency	*10.0%*	*$ 383,495*	*$ 105,643*	*$ 360,257*	*$ 849,394*
	Subtotal:	**$ 4,218,443**	**$ 1,162,072**	**$ 3,962,824**	***$ 9,343,339***
Engineering Design	*10.0%*	*$ 421,844*	*$ 116,207*	*$ 396,282*	*$ 934,334*
	Subtotal:	**$ 4,640,288**	**$ 1,278,279**	**$ 4,359,106**	***$ 10,277,673***
Project Administration - Construction Management	*10.0%*	*$ 464,029*	*$ 127,828*	*$ 435,911*	*$ 1,027,767*
	Subtotal:	**$ 5,104,316**	**$ 1,406,107**	**$ 4,795,017**	***$ 11,305,440***
Escalation to Midpoint of Construction	*3.0%*	*$ 397,030*	*$ 109,372*	*$ 372,972*	*$ 879,374*
	Total:	**$ 5,501,347**	**$ 1,515,479**	**$ 5,167,989**	**$ 12,184,814**

Mid point of construction
[06/15] 30 Months 2015 Construction

SUFFOLK COUNTY **WASTEWATER CONVEYANCE SYSTEM** **April 2013**
Bellport, Town of Brookhaven **PS NORTH OF LIRR TRACKS**
COST ESTIMATE

GRAVITY SEWER

	8" SDR 35 PVC PIPE				
1	6 FT - 8 FT DEEP	LF	3,650	$200.00	$730,000.00
2	8 FT - 10 FT DEEP	LF	1,762	$250.00	$440,500.00
3	10 FT - 12 FT DEEP	LF	820	$400.00	$328,000.00
4	12 FT - 14 FT DEEP	LF	750	$401.00	$300,750.00
	HORIZONTAL DRILLING 8-INCH PVC W/STEEL CASING				
4	6 FT - 8 FT DEEP	LF	150	$1,300.00	$195,000.00
	6" SDR 35 PVC PIPE PROPERTY LATERALS				
5	4 FT - 6 FT DEEP	LF	2,250	$185.00	$416,250.00
	CONCRETE MANHOLES				
6	6 FT - 8 FT DEEP	EA	13	$15,300.00	$198,900.00
7	8 FT - 10 FT DEEP	EA	4	$17,700.00	$70,800.00
8	10 FT - 12 FT DEEP	EA	4	$20,900.00	$83,600.00
9	12 FT - 14 FT DEEP	EA	1	$24,000.00	$24,000.00
10	**UTILITY RELOCATION ALLOWANCE**	EA	3	$1,000.00	$3,000.00
11	**MPT ALLOWANCE**	LS	1	$15,000.00	$15,000.00
12	**AS-BUILT DRAWINGS**	LS	1	$3,000.00	$3,000.00
				TOTAL COST -	**$2,808,800.00**

*** The unit prices are approximates**

SUFFOLK COUNTY **WASTEWATER CONVEYANCE SYSTEM** **April 2013**
Bellport, Town of Brookhaven **PS NORTH OF LIRR TRACKS**
COST ESTIMATE

FORCE MAIN SEWER

1	**DOUBLE 3" SDR 11 HDPE PIPE** 4 FT - 6 FT DEEP	LF	10,272	$265.00	$2,722,080.00
3	**CONNECTION TO EXISTING MANHOLE**	EA	1	$3,000.00	$3,000.00
4	**CLEANOUTS**	EA	20	$5,000.00	$100,000.00
5	**AIR RELIEF MANHOLES** 6 FT - 8 FT DEEP	EA	5	$16,500.00	$82,500.00
6	**DRAIN MANHOLES** 6 FT - 8 FT DEEP	EA	3	$15,800.00	$47,400.00
7	**MPT ALLOWANCE**	LS	1	$30,000.00	$30,000.00
8	**AS-BUILT DRAWINGS**	LS	1	$5,000.00	$5,000.00
				TOTAL COST -	**$2,989,980.00**

*** The unit prices are approximates**

SUFFOLK COUNTY **WASTEWATER CONVEYANCE SYSTEM** **April 2013**
Bellport, Town of Brookhaven **PS NORTH OF LIRR TRACKS**
COST ESTIMATE

PUMPING STATION

1	**MOBILIZATION**	EA	LUMP SUM	-	$30,000.00
2	**EQUIPMENT STORING SITE RENT**	MONTH	1	$3,000.00	$3,000.00
3	**EXCAVATION** 20' x 20' x 20'	CY	296	$28.38	$8,408.89
4	**BACKFILLING AND COMPACTION** 20' x 20' x 20'	CY	99	$6.45	$637.17
5	**SHEETING** 10' x 20' x 4	SF	800	$18.57	$14,859.28
6	**DEWATERING**	VLF	20	$284.23	$85,269.00
7	**SITE WORK (RESTORATION)**	LS	1	$30,000.00	$30,000.00
	CONCRETE STRUCTURES				
8	WET WELL	EA	1	$22,000.00	$22,000.00
9	VALVE PIT	EA	1	$13,000.00	$13,000.00
	EQUIPMENT				
10	DI BALL VALVE	EA	3	$500.00	$1,500.00
11	DI CHECK VALVE	EA	2	$700.00	$1,400.00
12	DUPLEX PUMPS	LS	1	$130,000.00	$130,000.00
13	ALUMINUM HATCHES	LS	1	$13,000.00	$13,000.00
14	FRP LADDER	EA	2	$1,800.00	$3,600.00
	FITTINGS				
15	4-INCH DI 90 ELBOW (FLANGE)	EA	4	$200.00	$800.00
16	4-INCH DI CROSS (FLANGE)	EA	1	$300.00	$300.00
17	4-INCH DI TRANSITION FITTING DI TO PVC (MECH. JOINT)	EA	2	$300.00	$600.00
18	DI PIPE	LF	100	$52.88	$5,288.00
19	**PORTABLE GENERATOR**	EA	1	$60,000.00	$60,000.00
20	**POWER SERVICE CONNECTION**	LS	1	$100,000.00	$100,000.00
21	**ELECTRICAL WORK**	LS	1	$300,000.00	$300,000.00
				TOTAL COST -	**$823,662.34**

*** The unit prices are approximates**

SUFFOLK COUNTY
Bellport, Town of Brookhaven

WASTEWATER CONVEYANCE SYSTEM
PS SOUTH OF LIRR TRACKS
COST ESTIMATE

April 2013

SUFFOLK COUNTY Bellport, Town of Brookhaven		Force Main		Gravity Sewer	TOTAL
		Force Main	Pumping Station	TOD/Hamlet CR	
Raw Cost		$ 3,049,980	$ 825,924	$ 3,373,900	$ 7,249,804
Contractor Overhead & Profit	21.0%	$ 640,496	$ 173,444	$ 708,519	$ 1,522,459
	Subtotal:	**$ 3,690,476**	**$ 999,368**	**$ 4,082,419**	**$ 8,772,263**
Bond and Insurance	6.0%	$ 221,429	$ 59,962	$ 244,945	$ 526,336
	Subtotal:	**$ 3,911,904**	**$ 1,059,330**	**$ 4,327,364**	**$ 9,298,598**
Construction Contingency	10.0%	$ 391,190	$ 105,933	$ 432,736	$ 929,860
	Subtotal:	**$ 4,303,095**	**$ 1,165,263**	**$ 4,760,101**	**$ 10,228,458**
Engineering Design	10.0%	$ 430,309	$ 116,526	$ 476,010	$ 1,022,846
	Subtotal:	**$ 4,733,404**	**$ 1,281,789**	**$ 5,236,111**	**$ 11,251,304**
Project Administration - Construction Management	10.0%	$ 473,340	$ 128,179	$ 523,611	$ 1,125,130
	Subtotal:	**$ 5,206,745**	**$ 1,409,968**	**$ 5,759,722**	**$ 12,376,435**
Escalation to Midpoint of Construction	3.0%	$ 404,998	$ 109,672	$ 448,010	$ 962,680
	Total:	**$ 5,611,742**	**$ 1,519,640**	**$ 6,207,732**	**$ 13,339,114**

Mid point of construction
[06/15]

30 Months

2015 Construction

SUFFOLK COUNTY
Bellport, Town of Brookhaven

WASTEWATER CONVEYANCE SYSTEM
PS SOUTH OF LIRR TRACKS
COST ESTIMATE

April 2013

GRAVITY SEWER

Item	Description	Unit of Measure	Estimated Quantity	Unit Price	Total Price
	8" SDR 35 PVC PIPE				
1	6 FT - 8 FT DEEP	LF	2,400	$200.00	$480,000.00
2	8 FT - 10 FT DEEP	LF	1,580	$250.00	$395,000.00
3	10 FT - 12 FT DEEP	LF	1,060	$400.00	$424,000.00
4	12 FT - 14 FT DEEP	LF	800	$500.00	$400,000.00
5	14 FT - 16 FT DEEP	LF	500	$600.00	$300,000.00
6	16 FT - 18 FT DEEP	LF	250	$800.00	$200,000.00
	HORIZONTAL DRILLING 8-INCH PVC W/STEEL CASING				
7	6 FT - 8 FT DEEP	LF	150	$1,300.00	$195,000.00
	6" SDR 35 PVC PIPE PROPERTY LATERALS				
8	4 FT - 6 FT DEEP	LF	1,500	$185.00	$277,500.00
	CONCRETE MANHOLES				
9	6 FT - 8 FT DEEP	EA	12	$15,300.00	$183,600.00
10	8 FT - 10 FT DEEP	EA	6	$17,700.00	$106,200.00
11	10 FT - 12 FT DEEP	EA	4	$20,900.00	$83,600.00
12	12 FT - 14 FT DEEP	EA	4	$22,000.00	$88,000.00
13	14 FT - 16 FT DEEP	EA	4	$25,000.00	$100,000.00
14	16 FT - 18 FT DEEP	EA	4	$30,000.00	$120,000.00
15	UTILITY RELOCATION ALLOWANCE	EA	3	$1,000.00	$3,000.00
16	MPT ALLOWANCE	LS	1	$15,000.00	$15,000.00
17	AS-BUILT DRAWINGS	LS	1	$3,000.00	$3,000.00
				TOTAL COST -	$3,373,900.00

* The unit prices are approximates

WASTEWATER CONVEYANCE SYSTEM
PS SOUTH OF LIRR TRACKS
COST ESTIMATE

FORCE MAIN SEWER

Item	Description	Unit of Measure	Estimated Quantity	Unit Price	Total Price
1	DOUBLE 3" SDR 11 HDPE PIPE 4 FT - 6 FT DEEP	LF	10,272	$265.00	$2,722,080.00
2	HORIZONTAL DRILLING 6 FT - 8 FT DEEP	LF	300	$200.00	$60,000.00
3	CONNECTION TO EXISTING MANHOLE	EA	1	$3,000.00	$3,000.00
4	CLEANOUTS	EA	20	$5,000.00	$100,000.00
5	AIR RELIEF MANHOLES 6 FT - 8 FT DEEP	EA	5	$16,500.00	$82,500.00
6	DRAIN MANHOLES 6 FT - 8 FT DEEP	EA	3	$15,800.00	$47,400.00
7	MPT ALLOWANCE	LS	1	$30,000.00	$30,000.00
8	AS-BUILT DRAWINGS	LS	1	$5,000.00	$5,000.00
				TOTAL COST -	$3,049,980.00

* The unit prices are approximates

SUFFOLK COUNTY
Bellport, Town of Brookhaven

WASTEWATER CONVEYANCE SYSTEM
PS SOUTH OF LIRR TRACKS
COST ESTIMATE

April 2013

PUMPING STATION

Item	Description	Unit of Measure	Estimated Quantity	Unit Price	Total Price
1	**MOBILIZATION**	EA	LUMP SUM	-	$30,000.00
2	**EQUIPMENT STORING SITE RENT**	MONTH	1	$3,000.00	$3,000.00
3	**EXCAVATION** 20' x 20' x 25	CY	370	$28.38	$10,511.11
4	**BACKFILLING AND COMPACTION** 20' x 20' x 25'	CY	123	$6.45	$796.46
5	**SHEETING** 10' x 20' x 4	SF	800	$18.57	$14,859.28
6	**DEWATERING**	VLF	20	$284.23	$85,269.00
7	**SITE WORK (RESTORATION)**	LS	1	$30,000.00	$30,000.00
	CONCRETE STRUCTURES				
8	WET WELL	EA	1	$22,000.00	$22,000.00
9	VALVE PIT	EA	1	$13,000.00	$13,000.00
	EQUIPMENT				
10	DI BALL VALVE	EA	3	$500.00	$1,500.00
11	DI CHECK VALVE	EA	2	$700.00	$1,400.00
12	DUPLEX PUMPS	LS	1	$130,000.00	$130,000.00
13	ALUMINUM HATCHES	LS	1	$13,000.00	$13,000.00
14	FRP LADDER	EA	2	$1,800.00	$3,600.00
	FITTINGS				
15	4-INCH DI 90 ELBOW (FLANGE)	EA	4	$200.00	$800.00
16	4-INCH DI CROSS (FLANGE)	EA	1	$300.00	$300.00
17	4-INCH DI TRANSITION FITTING DI TO PVC (MECH. JOINT)	EA	2	$300.00	$600.00
18	DI PIPE	LF	100	$52.88	$5,288.00
19	**PORTABLE GENERATOR**	EA	1	$60,000.00	$60,000.00
20	**POWER SERVICE CONNECTION**	LS	1	$100,000.00	$100,000.00
21	**ELECTRICAL WORK**	LS	1	$300,000.00	$300,000.00
				TOTAL COST -	**$825,923.86**

*** The unit prices are approximates**